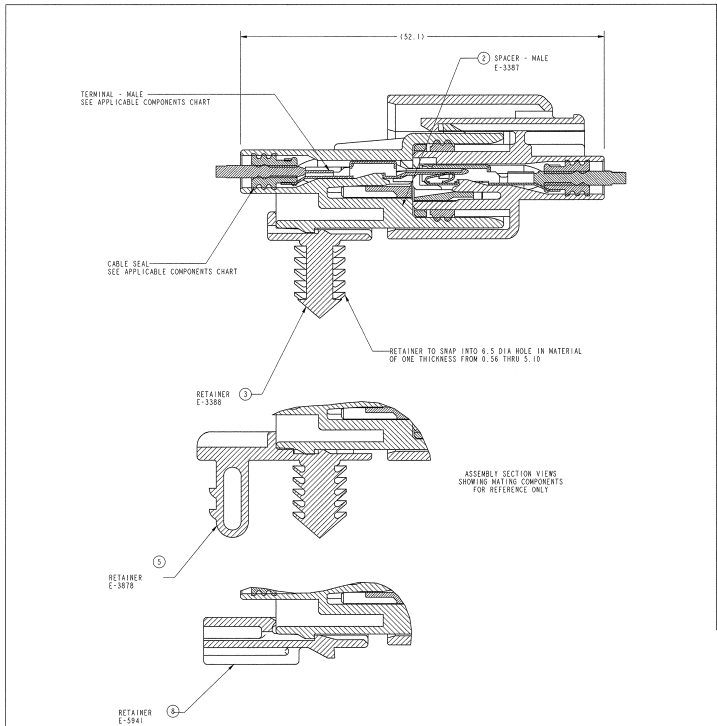

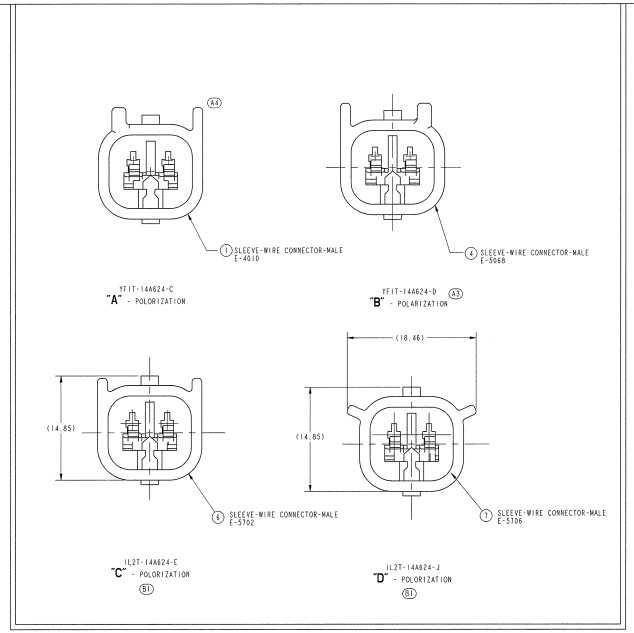

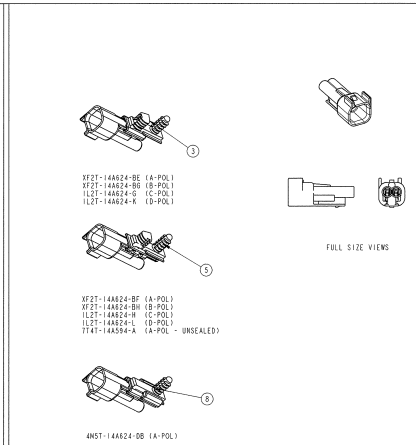

LTRS	REVISION			
ORIGINATOR	CHECKER	ENGR APP	MATL APP	
	RELEASED YFIT-14A624-CA YFIT-14A624-DA NB00-E-10754965-049			
B SCHILL	D OSTERHOUSE	-	-	
A1 A2 A3 A4	R1B THICKNESS INCREASED WAS EXPECTED MATING FORCES REMOVED SAME AS YFIT-14A624-C EXCEPT AS SHOWN ADDED VIEW TO SHOW "A" POLORIZATION COMPLETE TO MATCH FEMALE DRAWING YFIT-14A464-FA NB00-E-10498440-174			
S TINGLEY	D OSTERHOUSE	-	-	
	RELEASED XF2T-14A624-BEA XF2T-14A624-BFA XF2T-14A624-BGA XF2T-14A624-BHA NB00-E-10864791-001			
D OSTERHOUSE	D OSTERHOUSE	-	-	
B1 B2 B3	ADDED "C" & "D" POLARIZATION ADDED SDS EXCEPTION NOTE (10N WAS 18N) ADDED OPTIONAL MATERIAL NB00-E-10498440-182			
D. OSTERHOUSE	D OSTERHOUSE	-	-	
	RELEASED IL2T-14A624-EA, IL2T-14A624-GA IL2T-14A624-HA, IL2T-14A624-JA IL2T-14A624-KA, IL2T-14A624-LA			
C1	ADDED REFERENCE DIMENSION NB00-1-10848633-591			
D. OSTERHOUSE	S. ENSING			
D	RELEASED 4M5T-14A624-DBA ARCHIVED DATE: EE00-E-11565058-000 031010			
D. OSTERHOUSE	B. HAYWARD	MSRADNIC	EPC	
E	RELEASED 7T4T-14A594-AA ARCHIVED DATE: NB00-E-11763962-002			
D. OSTERHOUSE	B. HAYWARD		EPC	

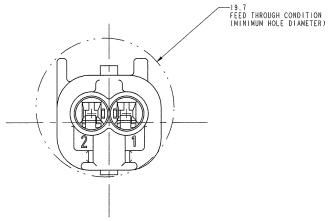

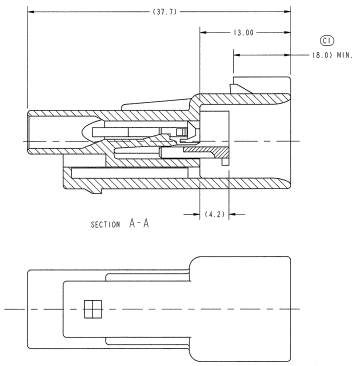

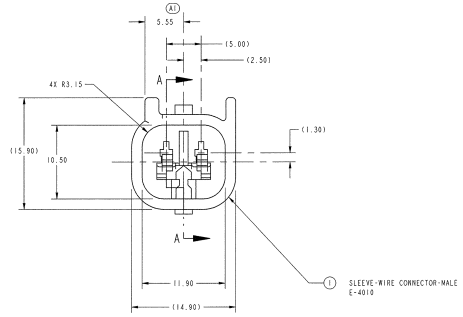

NOTES: UNLESS OTHERWISE SPECIFIED

GENERAL TOLERANCE:
±0.3 ALL ONE PLACE DIMENSIONS
±0.10 ALL TWO PLACE DIMENSIONS
±1°00' ALL ANGULAR DIMENSIONS

0.3mm MAXIMUM RADIUS PERMISSIBLE ON EDGES AND FILLETS SHOWN AS SHARP FOR PLASTIC PARTS.

PART MUST CONFORM TO ES-F8DB-14A464-AA (10-11-95)

PART MUST CONFORM TO THE ELECTRICAL CONNECTION SYSTEM DESIGN SPECIFICATION (SDS) REV. 1.4/28-JAN-97 EXCEPT: EL0035A TERMINAL SECONDARY LOCK
B2 FULL INSTALLED TO PRESET POSITION - 10N MIN AFTER INITIAL REMOVAL

DRAWING MUST CONFORM TO AVP-(T4D4/T406)-001 WHERE APPLICABLE DATED 4-29-96

FOR MATING ASSENBLY SEE REFERENCE CHART.

A2 ESTIMATED MATING FORCES:
TIN TERMINALS : (22 N)
GOLD TERMINALS : (18 N)

REFERENCE INFORMATION OF FULL ASSEMBLY				
SLEEVE ASSY - WIRE CONNECTOR - MALE (FORD ASSY. NO. / AFL ASSY. NO.)			SLEEVE ASSY - WIRE CONNECTOR FEMALE (FORD ASSY. NO. / AFL ASSY NO.)	
YFIT-14A624-C	E-4011	MATES WITH	YFIT-14A464-F	E-4014
YFIT-14A624-D	E-5067		YFIT-14A464-G	E-5069
XF2T-14A624-BE	E-4011-1		YFIT-14A464-F	E-4014
XF2T-14A624-BF	E-4011-2		YFIT-14A464-F	E-4014
XF2T-14A624-BG	E-5067-1		YFIT-14A464-G	E-5069
XF2T-14A624-BH	E-5067-2		YFIT-14A464-G	E-5069
YFIT-14A624-C	E-4011		YFIT-14A464-T	E-5229
XF2T-14A624-BE	E-4011-1		YFIT-14A464-T	E-5229
XF2T-14A624-BF	E-4011-2		YFIT-14A464-T	E-5229
IL2T-14A624-E	E-5703		YCIT-14A464-M	E-5701
IL2T-14A624-G	E-5703-1		YCIT-14A464-M	E-5701
IL2T-14A624-H	E-5703-2		YCIT-14A464-M	E-5701
IL2T-14A624-J	E-5707		IL2T-14A464-J	E-5705
IL2T-14A624-K	E-5707-1		IL2T-14A464-J	E-5705
IL2T-14A624-L	E-5707-2		IL2T-14A464-J	E-5705
4M5T-14A624-DB	E-4011-3		YFIT-14A464-F	E-4014

APPLICABLE COMPONENTS

DESCRIPTION	NOMINAL TERMINAL SIZE	COLOR	FORD COMPONENT PART NUMBER	AFL PART NUMBER	MATERIAL/SPECIFICATION NUMBER	APPLICABLE WIRE SIZES	FORD COMPONENT MATING PART NUMBER
TERMINAL-MALE (SN)	1.5 (CAT.2)	N/A	9TBG-14421-ADA	N/A	COPPER ALLOY/TIN PLATE	0.35-0.50 mm² OR 26-22 AWG	9TBG-14474-ADA
TERMINAL-MALE (SN)	1.5 (CAT.2)	N/A	9TBG-14421-AEA	N/A	COPPER ALLOY/TIN PLATE	0.75-1.00 mm² OR 18-18 AWG	9TBG-14474-AEA
TERMINAL-MALE (AU)	1.5 (CAT.2)	N/A	9TBG-14421-AHA	N/A	COPPER ALLOY/GOLD PLATE	0.35-0.50 mm² OR 26-22 AWG	9TBG-14474-AHA
TERMINAL-MALE (AU)	1.5 (CAT.2)	N/A	9TBG-14421-AJA	N/A	COPPER ALLOY/GOLD PLATE	0.75-1.00 mm² OR 18-18 AWG	9TBG-14474-AJA
TERMINAL-MALE (SN)	1.5 (CAT.2)	N/A	TBD	N/A	COPPER ALLOY/TIN PLATE	.50 mm² OR 14 AWG	98BG-14474-AKA
WIRE SEAL	N/A	PINK	9TBG-10C930-SB	E-1644-01	SILICONE / ESB-M2D280-A7	1.19 - 1.64 O.D.	N/A
WIRE SEAL	N/A	GREEN	XW43-14603-A	E-1644-00	SILICONE / ESB-M2D280-A7	1.65 - 2.10 O.D.	N/A
WIRE SEAL	N/A	YELLOW	XW4T-14603-F	E-1644-02	SILICONE / ESB-M2D280-A7	2.11 - 2.50 O.D.	N/A

LIST OF PARTS																		
MAX. TEMP. (AMBIENT + RISE) = 145°C (CLASS #3)																		
ITEM	DESCRIPTION	COLOR	AFL PART NUMBER	MATERIAL SPECIFICATION	RECYCLING CODE	OPTIONAL MAT'L SPECIFICATION	WEIGHT (GRAM)	NUMBER OF ITEMS REQUIRED										
1	SLEEVE (A-POL)	BLACK	E-4010	WSK-M4D608-A	PBT-GF33	WSB-M4D658-A	3.59	1	1	1								
2	SPACER	RED	E-3387	WSK-M4D790-A	PBT+PC+GF30		0.20	1	1	1	1	1	1	1	1	1	1	1
3	RETAINER	NATURAL	E-3388	ESA-M4D267-A	PA66		0.62			1	1		1		1			
4	SLEEVE (B-POL)	BLACK	E-5068	WSK-M4D608-A	PBT-GF33	WSB-M4D658-A	3.62		1		1	1						
5	RETAINER	NATURAL	E-3878	ESA-M4D267-A	PA66		0.85			1		1		1		1		1
6	SLEEVE (C-POL)	BROWN	E-5702	WSK-M4D608-A	PBT-GF33	WSB-M4D658-A	3.56					1	1	1				
7	SLEEVE (D-POL)	GREEN	E-5706	WSK-M4D608-A	PBT-GF33	WSB-M4D658-A	3.52								1	1	1	
8	RETAINER	BLACK	E-5941	ESA-M4D267-A	PA66		1.04											1

FORD ASSEMBLY NO.	AFL ASSY NO.
YFIT-14A624-C	E-4011
YFIT-14A624-D	E-5067
XF2T-14A624-BE	E-4011-1
XF2T-14A624-BF	E-4011-2
XF2T-14A624-BG	E-5067-1
XF2T-14A624-BH	E-5067-2
IL2T-14A624-E	E-5703
IL2T-14A624-G	E-5703-1
IL2T-14A624-H	E-5703-2
IL2T-14A624-J	E-5707
IL2T-14A624-K	E-5707-1
IL2T-14A624-L	E-5707-2
4M5T-14A624-DB	E-4011-3
7T4T-14A594-AA	

RECEIVED
JUL 0 8 2005
EPC Document Control

SALES PRINT
W-1781

7T4T-14A594-AA	AFL Automotive Division / EPC	AFL / EPC DRAWING NO. E-4011 / W-1781
4M5T-14A624-DBA	REFERENCE	MP-4M5I-180103-D4_AB_F
IL2T-14A624-LA	PART MUST COMPLY WITH MATERIAL SPECIFICATION WSS-M99P9999-A1 TO HELP SAFEGUARD HEALTH, SAFETY AND THE ENVIRONMENT.	
IL2T-14A624-KA	DRAFTED IN ACCORDANCE WITH FAO ENGINEERING DRAFTING STANDARD CURRENT AT INITIAL RELEASE	3RD ANGLE PROJ DIMENSIONS IN MILLIMETERS
IL2T-14A624-JA	CAD TYPE: E-OTHER	CAD LOC.: N/A
IL2T-14A624-HA	CAD FILE: PRT YFIT-14A624-C ; 3 DRW YFIT-14A624-C ; 5	EN IS MASTER
IL2T-14A624-GA	OPER. NO. / UNIT	DRAWING YFIT-14A624-CA
IL2T-14A624-EA	DESIGN: SCHILL	DETAIL: SCHILL
XF2T-14A624-BHA	TITLE: SLV ASY WIR CONN MLE	SHT 1 OF 1
XF2T-14A624-BGA		
XF2T-14A624-BFA	CHECKED: OSTERHOUSE	SAFETY
XF2T-14A624-BEA	SCALE: 4:1	DATE: 97-10-31
YFIT-14A624-DA	DIVISION: PLANT	DRW SIZE A0