△3 TABLE 1

YAZAKI SUB ASS'Y NO.	NO.	YAZAKI PART NO.	△3 YAZAKI PART NAME	MATERIAL	COLOR	QTY.
△3 7283-8732-40 ETC.	①	△3 SEE TABLE 2	SSD CONNECTOR HOUSING 3P-B FEMALE	PBT	△3 SEE TABLE 2	1
	②	7137-2613-80	SSD CONNECTOR PACKING 3P	SILICONE RUBBER	RED-IRON	1

△3 TABLE 2

	YAZAKI SUB ASS'Y NO.	YAZAKI HOUSING PART NO.	COLOR
△3	7283-8732-30	7183-8732-30	BLACK
	7283-8732-40, A	7183-8732-40	LIGHT GRAY

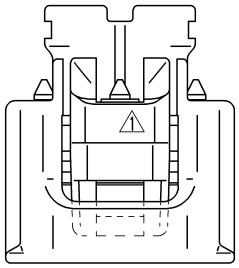

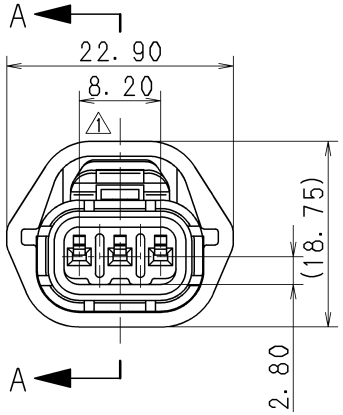

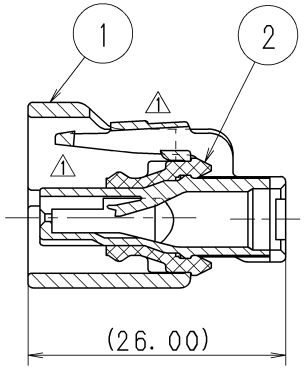

SEC. A-A

NOTES

1) APPLICABLE TERMINAL NO. : 7116-1680-02
7116-1680-08
2) APPLICABLE REAR HOLDER NO. : 7157-4603-80
3) APPLICABLE SEAL RUBBER NO. : 7157-3950-80
7157-3951-60
△2 4) APPLICABLE PLUGGING RUBBER NO. : 7157-3952-80

注 記

1) 適用ターミナル品番 : 7116-1680-02
7116-1680-08
2) 適用リヤホルダ品番 : 7157-4603-80
3) 適用ゴム栓品番 : 7157-3950-80
7157-3951-60
△2 4) 適用プラグ栓品番 : 7157-3952-80

ISSUE MARK

LET	DATE	REVISION RECORD	NO.	CHKD
△3	10.03.23	ADDED PART NO., ETC.	C10-Z092	T.W
△2	95.07.11	CHANGED NOTES	C95-M044	A.H
△1	95.02.23	CHANGED FORM, A	C95-L260	K.S
	94.08.03	NEW	C94-M072	K.S

GENERAL TOLERANCE

	10MAX	50MAX	100MAX	250MAX	2500VR	ANGLE	ECCENT
A	±0.15	±0.2	±0.3	±0.5	±0.75	±30′	0.1
B	±0.2	±0.3	±0.55	±0.95	±1.4	±30′	0.1
C	±0.3	±0.5	±0.8	±1.4	±2	±30′	0.15

SPECIFIED MASS

CUSTOMER
CUSTOMER PART NO. CUSTOMER DWG NO.
OFFICE TRIAL PART NO.
VENDOR
VENDOR NO.

DWG TYPE	DWG SOURCE	DWG DATE	UNIT	SCL	ANGLE
R	NEW	94.08.03	mm	2:1	3

APPROVED	CHECKED	CHECKED	DESIGN	DRAWN
H. KONDO	K. SUZUKI	T. WATANABE	K. SUZUKI	S. CALDEA
10.03.23	10.03.23	10.03.23	94.08.03	10.03.23

MATL. SPEC. △3 SEE TABLE 1 TREAT. & FIN.

NAME SSD CONNECTOR HOUSING 3P-B FEMALE SUB ASS'Y

PART NO. CH. CODE △3 7283-8732-40 ETC.

DWG NO. 7283-8732-40:R

YAZAKI CORPORATION