SUB ASSEMBLY PART NO. AND CH. CODE	NO.	PART NO. AND CH. CODE	MATERIAL	COLOR	③QTY.
7283-8180, B	①	7183-8180	PBT	NATURAL	1
	②	7157-4651 ③	PBT	③NATURAL	1

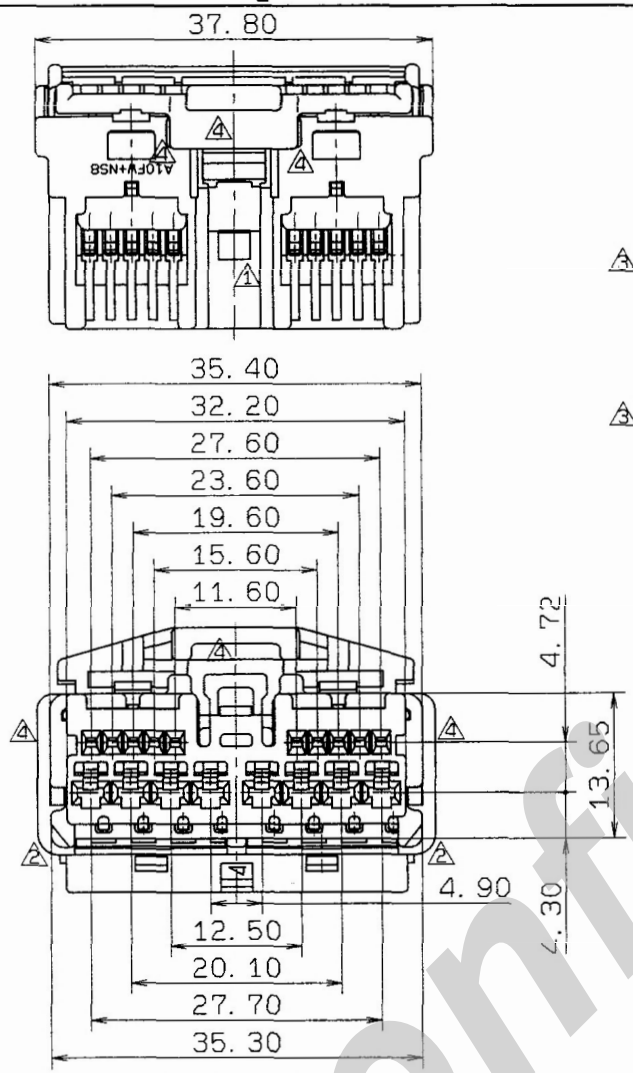

注 記

1. 嵌合相手品番：7282-8180
③ 2. 適用端子品番：A TYPE・・・7116-1670-02, 7116-1670-08, 7116-1800-02
:NS TYPE・・・7116-1820-02, 7116-1821-02

NOTES

1. MATING PART NO. :7282-8180
③ 2. APPLICABLE TERMINAL NO. :A TYPE・・・7116-1670-02, 7116-1670-08, 7116-1800-02
:NS TYPE・・・7116-1820-02, 7116-1821-02

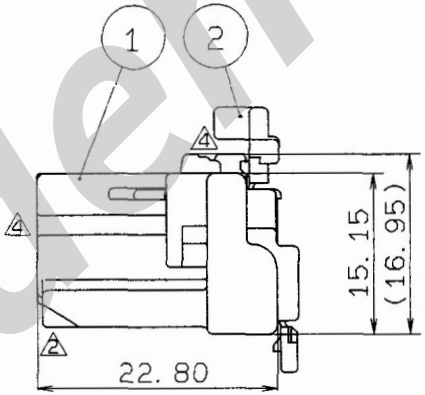

LET	DATE	REVISION RECORD	NO.	CHKD
④	99.04.22	CHANGED FORM. B	C99-L595	M.F
③	94.11.18	CH. REAR HOLDER COLOR	C94-M537	O.S
②	93.05.28	CHANGED FORM	C93-6661	T.Y
①	92.12.03	CHANGED FORM	C92-7282	R.F
	92.09.01	NEW	C92-6839	R.F

GENERAL TOLERANCE

	10MAX	50MAX	100MAX	250MAX	2500VR	ANGLE	ECCENT
A	±0.15	±0.2	±0.3	±0.5	±0.75	±30′	0.1
B	±0.2	±0.3	±0.55	±0.95	±1.4	±30′	0.1
C	±0.3	±0.5	±0.8	±1.4	±2	±30′	0.15

SPECIFIED

MASS g

CUSTOMER

CUSTOMER PART NO. | CUSTOMER DWG NO.

OFFICE | TRIAL PART NO.

VENDOR

VENDOR NO.

DWG TYPE	DWG SOURCE	DWG DATE	UNIT	SCL	ANGLE
R	NEW	92.09.01	mm	2/1	3

APPROVED	CHECKED	CHECKED	DESIGN	DRAWN
辻	小俣	福井	SUGIYAMA	HATORI 福井 鶴
99.05.21	99.05.21	99.05.20	92.09.01	99.04.22

MATL. SPEC. SEE TABLE | TREAT. & FIN.

NAME A10+NS08 CONNECTOR SUB ASSEMBLY (F)

PART NO. CH. CODE 7283-8180, B

DWG NO. 7283-8180:R | SET DWG NO.

YAZAKI CORPORATION

ISSUE MARK

Confidential