GENERAL TOLERANCE											
	10 MAX	50 MAX	100 MAX	250 MAX	250 OVR	R5 MAX	R10 MAX	R20 MAX	R20 OVR	ANGLE	ECCENT
A	±0.15	±0.2	±0.3	±0.5	±0.75	±0.2	±0.3	±0.5	±2.5	±3°	0.1
B	±0.2	±0.3	±0.55	±0.95	±1.4					±3°	0.1
C	±0.3	±0.5	±0.8	±1.4	±2					±3°	0.15

SUB ASSEMBLY PART NO. AND CH. CODE	NO.	PART NO. AND CH. CODE	MATERIAL	COLOR	QTY.
7283-0016-30, A	①	7183-0016-30	PBT	BLACK	1
	②	7137-2949-80	SILICONE RUBBER	RED IRON	1
	③	7158-9340-50	PBT-G	RED	1

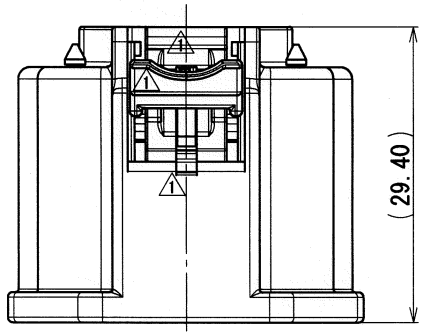

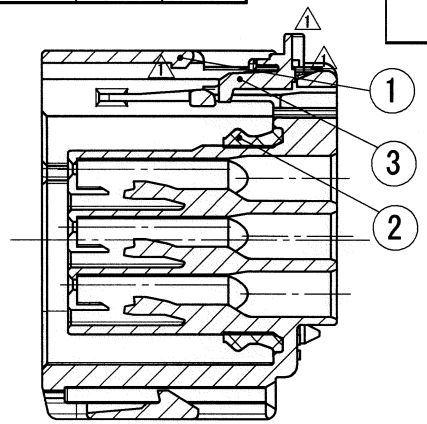

SEC. A-A

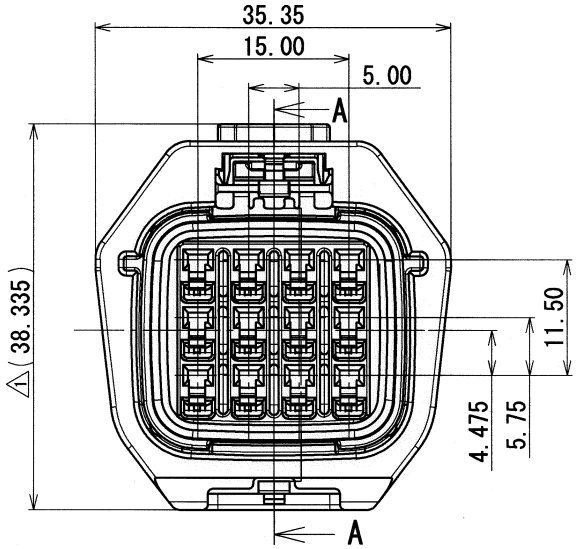

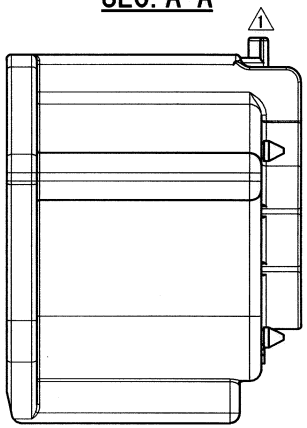

注記

1. 嵌合相手品番 : 7182-8564-30
2. 適用端子品番 : 7116-4102-02(CAVS 0.3～CAVS 0.5)
   : 7116-4103-02(CAVS 0.85～CAVS 1.25)
3. 適用ゴム栓品番 : 7158-3003-90(CAVS 0.3～CAVS 0.5)
   : 7158-3004-40(CAVS 0.85～CAVS 1.25)
4. 適用空栓品番 : 7158-3198-90

NOTES

1. MATING PART NO. : 7182-8564-30
2. APPLICABLE TERMINAL NO. : 7116-4102-02(CAVS 0.3～CAVS 0.5)
   : 7116-4103-02(CAVS 0.85～CAVS 1.25)
3. APPLICABLE RUBBER STOPPER NO. : 7158-3003-90(CAVS 0.3～CAVS 0.5)
   : 7158-3004-40(CAVS 0.85～CAVS 1.25)
4. APPLICABLE DUMMY PLUG NO. : 7158-3198-90

ISSUE MARK

LET	DATE	REVISION RECORD	NO.	CHKD
1	05/08/01	CHANGED FORM, A	C05-ZA77	M.M
	05/04/26	NEW	C05-Z703	M.M

GENERAL TOLERANCE							
	10MAX	50MAX	100MAX	250MAX	250OVR	ANGLE	ECCENT
A	±0.15	±0.2	±0.3	±0.5	±0.75	±30'	0.1
B	±0.2	±0.3	±0.55	±0.95	±1.4	±30'	0.1
C	±0.3	±0.5	±0.8	±1.4	±2	±30'	0.15

SPECIFIED

MASS g

CUSTOMER

CUSTOMER PART NO. | CUSTOMER DWG NO.

OFFICE | TRIAL PART NO.

VENDOR

VENDOR NO.

DWG TYPE	DWG SOURCE	DWG DATE	UNIT	SCL	ANGLE
R	NEW	05/04/26	mm	2:1	3

APPROVED	CHECKED	CHECKED	DESIGN	DRAWN
紀之	桑山	村松	M. MURAMATSU	G. BRAZIL ROMEL GALIZA
05.08.03	05.08.03	05.08.03	05/03/31	05/08/01

MATL. SPEC. SEE TABLE

TREAT. & FIN.

NAME 1.5(060) 12P SEALED CONNECTOR

HOUSING FEMALE SUB ASSEMBLY

PART NO. CH. CODE 7283-0016-30, A

DWG NO. 7283-0016-30:R

SET DWG NO.

YAZAKI CORPORATION