SUB ASSEMBLY PART NO. AND CH. CODE	NO.	PART NO. AND CH. CODE	MATERIAL	COLOR	QTY.
7282-8854-30, C △3	①	7182-8854-30	PBT	BLACK	1
	②	△3 7158-5267	PBT	△3 NATURAL	1

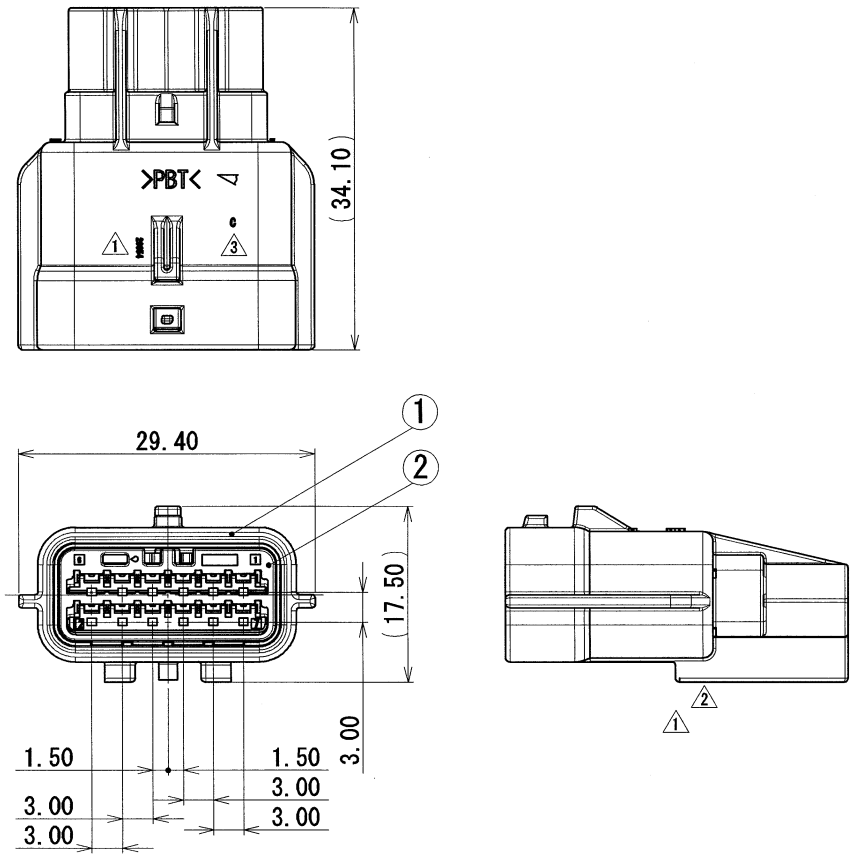

NOTES

1. MATING PART NO. : 7283-8854-30
2. APPLICABLE TERMINAL NO. : 7114-4415-02 ETC.
3. APPLICABLE SEAL RUBBER NO. : 7158-3165-90, 7158-3166-60, 7158-3167-80
   7158-3168-80
4. APPLICABLE UNUSED CAVITY PLUG: 7158-3169-40

注記

1. 嵌合相手品番 : 7283-8854-30
2. 適用端子品番 : 7114-4415-02 ETC.
3. 適用ｺﾞﾑ栓品番 : 7158-3165-90, 7158-3166-60, 7158-3167-80
   7158-3168-80
4. 適用防水栓品番 : 7158-3169-40

ISSUE MARK

LET	DATE	REVISION RECORD	NO.	CHKD
△3	03/08/07	CHANGED CODE, C	C03-X324	T.Y
△2	02/12/04	CHANGED FORM, B	C02-Y495	T.Y
△1	02/02/06	ELIMINATE SECTION, ETC.	C02-X199	T.Y
	01/11/08	NEW	C01-Y135	T.Y

GENERAL TOLERANCE

	10MAX	50MAX	100MAX	250MAX	2500VR	ANGLE	ECCENT
A	±0.15	±0.2	±0.3	±0.5	±0.75	±30'	0.1
B	±0.2	±0.3	±0.55	±0.95	±1.4	±30'	0.1
Ⓒ	±0.3	±0.5	±0.8	±1.4	±2	±30'	0.15

SPECIFIED

MASS g

CUSTOMER

CUSTOMER PART NO. | CUSTOMER DWG NO.

OFFICE | TRIAL PART NO.

VENDOR

VENDOR NO.

DWG TYPE	DWG SOURCE	DWG DATE	UNIT	SCL	ANGLE
R	NEW	01/11/08	mm	2/1	3

APPROVED	CHECKED	CHECKED	DESIGN	DRAWN
小園		山勝	M. KASHIYAMA	M. SASSA
03.08.19		03/08/19	01/05/08	03/08/07

MATL. SPEC. SEE TABLE

TREAT. & FIN.

NAME RH TYPE CONNECTOR 12P

SUB ASSEMBLY MALE

PART NO. CH. CODE 7282-8854-30, C △3

DWG NO. 7282-8854-30:R

SET DRW NO.

YAZAKI CORPORATION