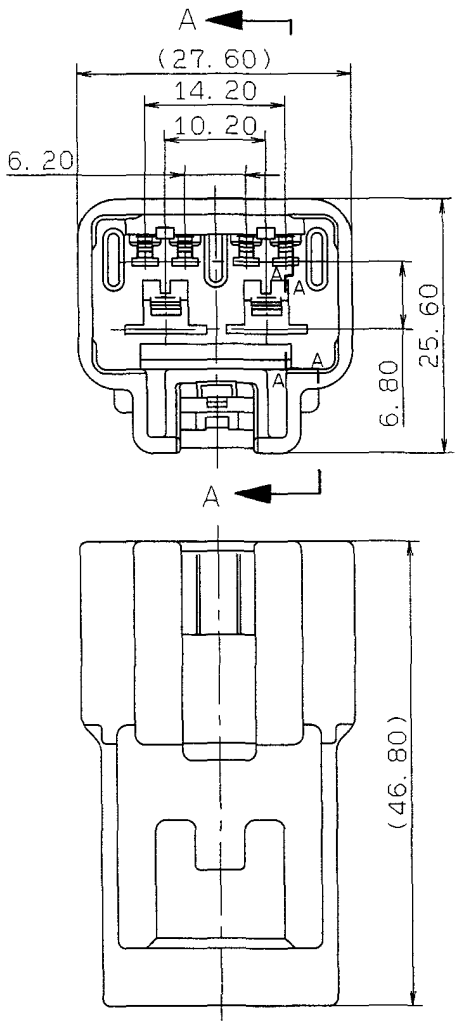

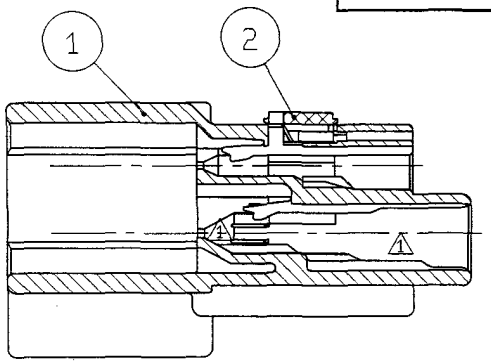

1 SEC. A-A

TABLE 1

YAZAKI SUB ASSEMBLY PART NO.	NO.	YAZAKI PART NO.	MATERIAL	COLOR	QTY.
7282-1064 ETC.	1	SEE TABLE 2	3 PBT	SEE TABLE 2	1
	2	7157-4330	3 PBT	NATURAL	1

TABLE 2

YAZAKI SUB ASSEMBLY PART NO.	YAZAKI PART NO.	COLOR
7282-1064. B	7182-1064	NATURAL
7282-1064-10. B	7182-1064-10	DARK GRAY
7282-1064-30. B	7182-1064-30	BLACK
7282-1064-40. B	7182-1064-40	LIGHT GRAY
7282-1064-50. B	7182-1064-50	ORANGE
7282-1064-60. B	7182-1064-60	GREEN
7282-1064-80. B	7182-1064-80	BROWN
7282-1064-90. B	7182-1064-90	BLUE

注記

1. 適用ターミナル品番：090Ⅱ 7114-4020 ETC.
   312 7114-6040 ETC.
1. 2. 嵌合相手品番：7283-1064 ETC.

NOTES

1. APPLICABLE TERMINAL NO. :
   090Ⅱ 7114-4020 ETC.
   312 7114-6040 ETC.
1. 2. MATING PART NO. :7283-1064 ETC.

LET	DATE	REVISION RECORD	NO.	CHKD
3	98.01.07	CHANGED MATERIAL	C97-N781	J. S
2	96.07.12	CHANGED MATERIAL. B	C96-M261	H. K
1	95.12.12	CHANGED FORM & ADDED NOTES. A	C95-M995	H. T
	92.05.29	NEW	C92-L428	T. T

GENERAL TOLERANCE

	10MAX	50MAX	100MAX	250MAX	2500VR	ANGLE	ECCENT
A	±0.15	±0.2	±0.3	±0.5	±0.75	±30′	0.1
B	±0.2	±0.3	±0.55	±0.95	±1.4	±30′	0.1
C	±0.3	±0.5	±0.8	±1.4	±2	±30′	0.15

SPECIFIED

MASS g

CUSTOMER

CUSTOMER PART NO. | CUSTOMER DWG NO.

OFFICE | TRIAL PART NO.

VENDOR

VENDOR NO.

DWG TYPE	DWG SOURCE	DWG DATE	UNIT	SCL	ANGLE
R	NEW	92.05.29	mm	2/1	3

APPROVED	CHECKED	CHECKED	DESIGN	DRAWN
加藤	山梨	渡辺	Y. OHTA	KUROSAWA 杉山淳
98.1.15	98.01.15	98.01.13	89.05.20	98.01.07

ISSUE MARK

MATL. SPEC. SEE TABLE 1 | TREAT. & FIN.

NAME 090Ⅱ 4P+312 2P HYBRID CONNECTOR SUB ASSEMBLY MALE

PART NO. CH. CODE 7282-1064 ETC.

DWG NO. 7282-1064:R | SET DWG NO.

YAZAKI CORPORATION