RUBBER PART GENERAL TOLERANCE			
PART DIM.	1	2	③
0 TO 3	± 0.2	± 0.3	± 0.4
3 TO 6	± 0.2	± 0.4	± 0.5
6 TO 10	± 0.3	± 0.5	± 0.6
10 TO 18	± 0.3	± 0.6	± 0.8
18 TO 30	± 0.4	± 0.8	± 1.0
30 TO 50	± 0.5	± 1.0	± 1.5
50 TO 80	± 0.6	± 1.2	± 2.0
80 TO 120	± 0.7	± 1.4	± 2.5
120 TO 180	± 0.8	± 1.6	± 3.0
180 TO 250	± 1.0	± 2.0	± 4.0
250 TO 315	± 1.2	± 2.5	± 5.0
315 TO 400	± 1.5	± 3.0	± 6.0
400 TO 500	± 1.8	± 3.5	± 7.0
500 OVER	± 0.4 %	± 0.8 %	± 1.5 %

④ HOUSING PITCH	SEAL RUBBER PART NO.	④ A	COLOR	APPLICABLE WIRE SIZE
5 mm	7157-3883-50	ø5.0	PINK	② AVS 1.25, AVSS 2
6 mm	7157-3880-20	ø5.6	VIOLET	② AVS 0.3, CAVS 0.3~0.5 ③ CAVUS 0.5
	7157-3881-70	ø5.6	YELLOW	② AVS 0.5~0.85, CAVS 1.25 AVX, AEX 0.5~0.85
	7157-3882-40	ø5.6	GRAY	② AVS 1.25~2, AVSS 2 AVX, AEX 1.25

NOTES

④ 1) APPLICABLE TERMINAL PART NO. :

7157-3880-20: 7116-1530, 7116-1530-08
7157-3881-70: 7116-1530, 7116-1530-08
7157-3882-40: 7116-1531, 7116-1531-08
7157-3883-50: 7116-1531, 7116-1531-08

④ 2) APPLICABLE HOUSING NO. :

7157-3883-50: 7283-7170-40
7157-3880-20:
7157-3881-70: 7283-7130-40 ETC.
7157-3882-40:

注記

④ 1) 適用端子品番:

7157-3880-20: 7116-1530, 7116-1530-08
7157-3881-70: 7116-1530, 7116-1530-08
7157-3882-40: 7116-1531, 7116-1531-08
7157-3883-50: 7116-1531, 7116-1531-08

④ 2) 適用ハウジング品番:

7157-3883-50: 7283-7170-40
7157-3880-20:
7157-3881-70: 7283-7130-40 ETC.
7157-3882-40:

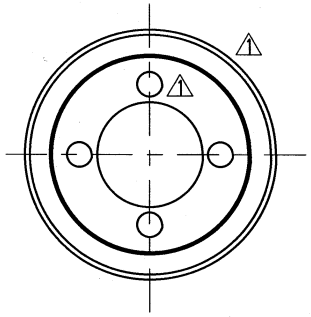

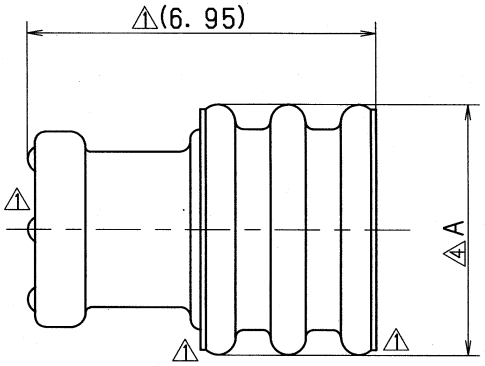

LET	DATE	REVISION RECORD	NO.	CHKD
④	05/02/14	CHANGED NOTES ETC.	C05-Z202	K. I
③	97/07/30	ADDED WIRE SIZE	C97-7659	K. U
②	96/03/29	ADDED WIRE SIZE	C96-L535	H. Y
①	89/01/06	形状変更	T89-6009	T. N
	88/09/28	NEW	8MC-1230	S. K

GENERAL TOLERANCE

	10MAX	50MAX	100MAX	250MAX	2500VR	ANGLE	ECCENT
A	±0.15	±0.2	±0.3	±0.5	±0.75	±30′	0.1
B	±0.2	±0.3	±0.55	±0.95	±1.4	±30′	0.1
C	±0.3	±0.5	±0.8	±1.4	±2	±30′	0.15

SPECIFIED

MASS g

CUSTOMER
CUSTOMER PART NO. | CUSTOMER DWG NO.
OFFICE | TRIAL PART NO.
VENDOR
VENDOR NO.

DWG TYPE	DWG SOURCE	DWG DATE	UNIT	SCL	ANGLE
R	NEW	88/09/28	mm	10:1	3

APPROVED	CHECKED	CHECKED	DESIGN	DRAWN
移小	巻木	池谷	KODAMA	D. GABRIEL ROMEV GALIZA
'05.02.14	'05.02.14	'05.02.14	88/09/28	05/02/14

MATL. SPEC. ④ SILICONE RUBBER | TREAT. & FIN.

NAME NEW E-TYPE CONNECTOR SEAL RUBBER 5mm PITCH (1.25) ETC.

PART NO. / CH. CODE 7157-3883-50 ETC.

DWG NO. 7157-3880-20:R | SET DWG NO.

YAZAKI CORPORATION

ISSUE MARK