②②	YAZAKI PART NO.	MATL. &TREAT.	⑤C	④D	④E	③ WIRE SIZE
④	7114-1670-02 (7B14-1670-02)	BRASS (TIN PLATING)	8.70±0.1	1.95	2.20	CAVS, CAVUS 0.30~0.50
	7114-1670-08	BRASS (GOLD PLATING) ⑥				
③	7114-1800-02	BRASS (TIN PLATING) ⑥	8.55±0.1	2.10	2.05	CAVUS 0.85

注 記

③② 1. 嵌合メスターミナル品番：7116-1670-02, 7116-1670-08, 7116-1800-02

④ 2. ( ) 内品番は、エアバッグ回路及び特別管理回路に使用する時に適用すること.

NOTES

③② 1. MATING FEMALE TERMINAL NO. :7116-1670-02, 7116-1670-08, 7116-1800-02

④ 2. IN THE CASE OF A/B CIRCUITS AND CONTOROL CIRCUITS USE PART NO. ( ).

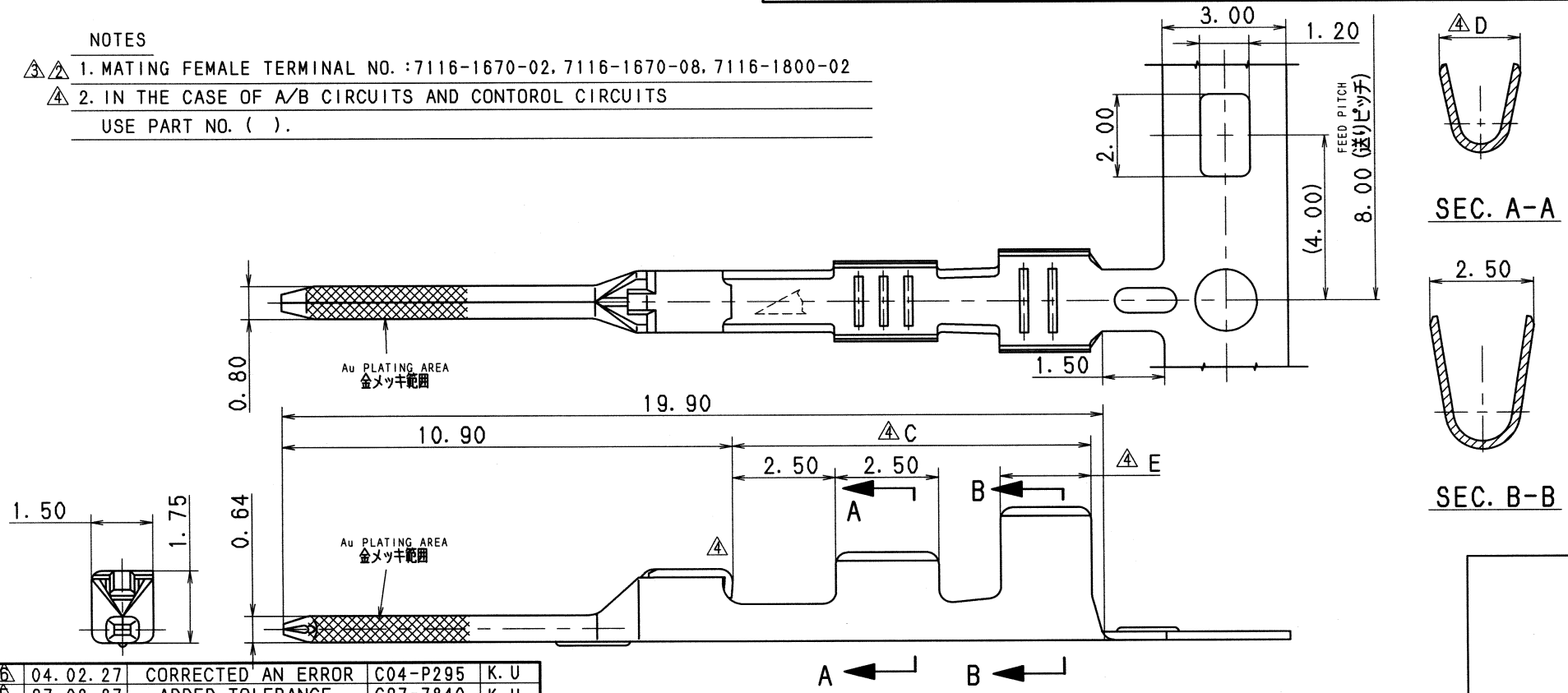

LET	DATE	REVISION RECORD	NO.	CHKD
⑥	04.02.27	CORRECTED AN ERROR	C04-P295	K.U
⑤	97.08.27	ADDED TOLERANCE	C97-7840	K.U
④	97.02.14	ADDED A/B PART NO. & ADDED DIMENSION	C97-L342	H.K
③	93.04.23	ADDED PART NO. ETC.	C93-P064	H.F
②	92.06.09	ADDED PART NO.	C92-6539	H.Y
①	91.02.01	CHANGED FORM	C90-7607	H.Y
—	90.07.24	NEW	C90-6943	H.Y

GENERAL TOLERANCE

	10MAX	50MAX	100MAX	250MAX	2500VR	ANGLE	ECCENT
A	±0.15	±0.2	±0.3	±0.5	±0.75	±30′	0.1
B	±0.2	±0.3	±0.55	±0.95	±1.4	±30′	0.1
Ⓒ	±0.3	±0.5	±0.8	±1.4	±2	±30′	0.15

SPECIFIED

MASS g

ISSUE MARK

CUSTOMER			
CUSTOMER PART NO.		CUSTOMER DWG NO.	
OFFICE		TRIAL PART NO.	
VENDOR		7F8914-7093	
VENDOR NO.		7F9114-7041	

DWG TYPE	DWG SOURCE	DWG DATE	UNIT	SCL	ANGLE
R	NEW	90.07.24	mm	10/1	3

APPROVED	CHECKED	CHECKED	DESIGN	DRAWN
杉本修 '04.3.02	—	—	H. SAITOH 90.07.24	浦野 '04.03.02

MATL. SPEC. SEE TABLE

TREAT. & FIN. SEE TABLE

NAME A-TYPE TERMINAL (M)

PART NO. ④7114-1670-02 (7B14-1670-02) ETC.

CH. CODE

DWG NO. 7114-1670-02:R

SET DWG NO.

YAZAKI CORPORATION