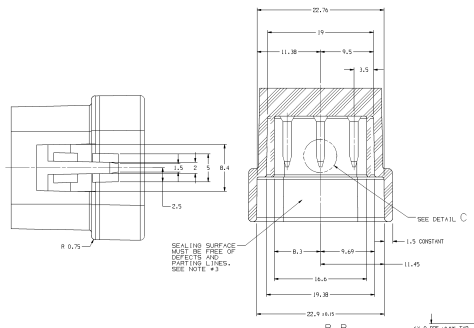

SECTION B-B

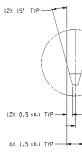

DETAIL C
SCALE 10:1

DETAIL D
SCALE 10:1

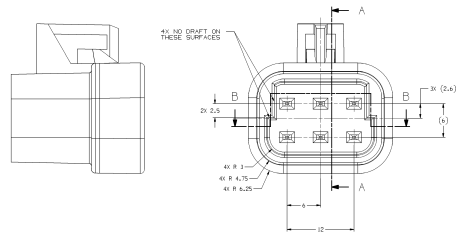

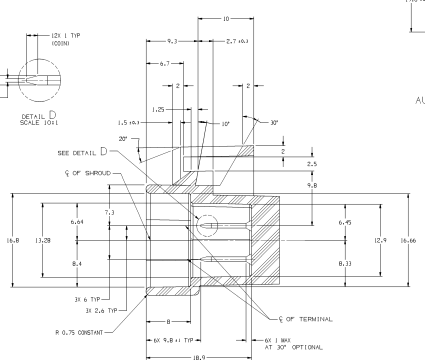

SECTION A-A

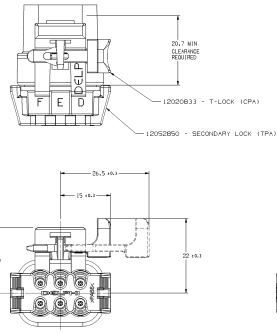

SCALE 3:1
AUXILIAR ASSEMBLY VIEW

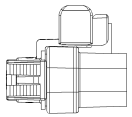

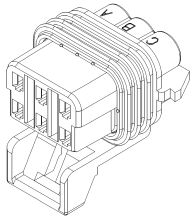

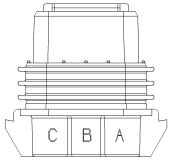

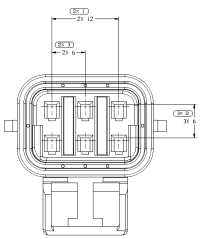

TYPE 101

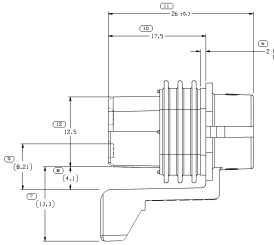

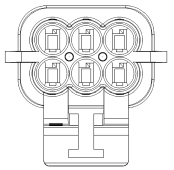

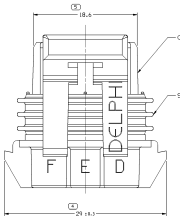

MATING CONNECTOR INFORMATION

RECOMMENDED MAT'L - GLASS REINFORCED NYLON OR POLYESTER.

NOTES

1. WHEN USING THIS INFORMATION FOR A NEW DESIGN, REQUEST THE LATEST COPY OF THIS PRINT FROM PACKARD ELECTRIC DIVISION.
2. ALL RADII 0.4, UNLESS OTHERWISE SPECIFIED.
3. THIS SURFACE IS "CRITICAL" FOR PART FUNCTION. ALSO, ALL THREE PLACE DIMENSIONS ARE "CRITICAL".
4. THE SHAPE OF THE SHROUD AND LOCK ARE REPRESENTATIVE. VARIATIONS FOR ADAPTING THE SHROUD FOR SPECIFIC DEVICES AND/OR MOLDING METHODS ARE PERMITTED AS LONG AS FUNCTION IS MAINTAINED.

OPERATOR CHANGED							
35039194							
SIZE	SCALE	SHEET NO	SHEET NO	TOTAL	REV	REV	CHP
A3x3	5:1	2 OF 2	1 OF 1	1	P	02	

SYMBOL DEFINITION		MISSING SYMBOLS	
A DIMENSION WITHOUT AN INSPECTION REPORT SYMBOL (*) DOES NOT REQUIRE INSPECTION. IT MAY BE CONTROLLED ON THE INDIVIDUAL COMPONENT DRAWING.	TOTAL NO OF INSPECTIONS REQUIRED	16	NO MISSING SYMBOL NUMBER
	LAST NO. USED	12	

CHG STATUS						REVISION HISTORY				
DATE	STA	REV	N/P	DAB	DAB		NTN	BY	APPROVED	
01JUN 11	R	01	-			120929HB - WAS SEPARATE DRAWING 3927669 - RELEASED PART DRAWING	47625	ESG	ESG	JHM
16APR 17	R	02	-			2927669 - RDW NO 120929HB & 120928HJ AND UPDATED PART AVAILABILITY	43636	DLB	DLB	HP

PART NO	REV	N/P	TYPE					
3927669	01	AA	100				M151001	12929848
12929848	01		101	12929846	12929601			
PART NO	REV	N/P	TYPE	CONNECTOR	SEAL CONN	ADHESIVE	ASM CONN	

ALTERNATE TERM (IN)									
TOL	1	2	3	4	5	6	7	8	9
TOL	±0.5	±0.25	±0.13	±0.08	±0.05	±0.03	±0.02	±0.01	±0.005

ALTERNATE TERM (MM) ±0.01 ±0.01 ±0.01 ±0.01 ±0.01 ±0.01 ±0.01 ±0.01 ±0.01

ALTERNATE TERM (MM) ±0.01 ±0.01 ±0.01 ±0.01 ±0.01 ±0.01 ±0.01 ±0.01 ±0.01

ALTERNATE TERM (MM) ±0.01 ±0.01 ±0.01 ±0.01 ±0.01 ±0.01 ±0.01 ±0.01 ±0.01

(D.P.) PROCESS SENSITIVE DIMENSION

DIMENSIONS ENCLOSED IN A DASHED RECTANGLE ARE CRITICAL TO FUNCTION. CONTROL DIMENSIONS ARE IN TOLERANCE.

SCALE 5:1
THIRD ANGLE PROJECTION

DO NOT SCALE

USE MATH DATA

NX

DELPHI

DELPHI PACKARD ELECTRICAL/ELECTRONIC ARCHITECTURE
DIVISION OF
DELPHI AUTOMOTIVE SYSTEMS LLC

COPYRIGHT 2004 DELPHI TECHNOLOGIES, INC. ALL RIGHTS RESERVED.

THIS DRAWING IS THE PROPERTY OF DELPHI CORPORATION AND IS LOANED TO THE RECIPIENT FOR ITS EXCLUSIVE USE. REPRODUCTION OF THIS DRAWING OR DISCLOSURE OF ITS CONTENTS WITHOUT WRITTEN PERMISSION IS PROHIBITED.

PART DRAWING

STYLE

COLOR CHT: BLACK

UNLESS OTHERWISE SPECIFIED
THIS DRAWING IS A NONMANDATORY BLACK AND WHITE REPRODUCTION OF THE ORIGINAL. THE ORIGINAL IS MAINTAINED IN ELECTRONIC FORMAT AND IS ACCESSIBLE BY AUTHORIZED PERSONNEL. ALL REVISIONS MUST BE MADE TO THE ORIGINAL.

		DATE
CHK		
APVD	EDUARDO SEDA	01DEC16
APVD	EDUARDO SEDA	01DEC16
APVD	EDUARDO RENATO	2DEC16
APVD		
APVD		

SUBSTANCES OF CONCERN: NO RECORDED CONTENT PER DELPHI (EXPORT)

NOTES
SEE CHART

ALL DIMENSIONS ARE IN MILLIMETERS.

REFERENCE

DRAWING NAME
TAXI ASM CONN M/P 150

DRAWING NUMBER
35039194

SIZE	SCALE	SHEET NO	SHEET NO	REV	REV	REV
A3x3	5:1	1 OF 2	1 OF 1	P	02	

32039194