SYMBOL DEFINITION		
A DIMENSION WITHOUT AN INSPECTION REPORT SYMBOL (□) DOES NOT REQUIRE INSPECTION. IT MAY BE CONTROLLED ON THE INDIVIDUAL COMPONENT DRAWING.	TOTAL NO OF INSPECTIONS REQUIRED	17
	LAST NO. USED	16

MISSING SYMBOL: NO MISSING SYMBOL NUMBER

DWG STATUS DATE	STS	REV	N/P	CHG	ZONE	REVISION HISTORY	AUTH	DR	AP/D1	AP/D2
26JN03	R	01	-	-		ALL PARTS - RELEASED	242936	EGR	EGR	GM
30SE03	R	02	-	-		ALL PARTS - UPDATED PDM ATTRIBUTES	246100	EGR	EGR	BG
25AU04	-	03	-	-		ALL PARTS - ADDED STACK ANALYSIS VIEW	257699	AKJ	AKJ	BDG
05OC07	R	04				ALL PARTS - REMOVED RECYCLING CODE	402554	MEC	MEC	BDG

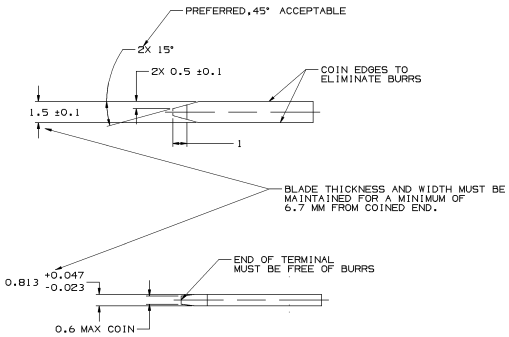

MATERIAL SPECIFICATIONS

RECOMMENDED

BASE METAL - CDA-210, GILDING, EXTRA SPRING TEMPER

PLATING - 0.005±0.0025 MM THICK TIN

MINIMUMS

ELECTRICAL CONDUCTIVITY - ≥20% IACS AT 20°C. USE OF A MATERIAL WITH CONDUCTIVITY < 20% IACS MUST BE APPROVED BY PACKARD ELECTRIC MATERIALS ENGINEERING.

TENSILE STRENGTH - 407 MPa

PLATING - FOR LOW ENERGY (≤5v) AND NON-PASSENGER COMPARTMENT POWER CIRCUITS, 0.005±0.0025 MM THICK TIN. FOR MATERIALS CONTAINING 10% OR MORE ZINC, AND UNDERPLATE OF COPPER 0.005±0.0025 MM THICK IS REQUIRED

MATING BLADE INFORMATION

SCALE 8:1

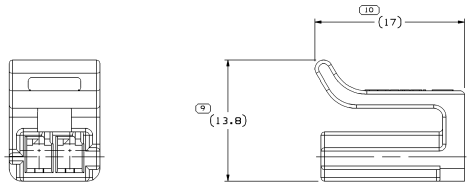

TYPE 102
SAME AS TYPE 101
EXCEPT AS SHOWN

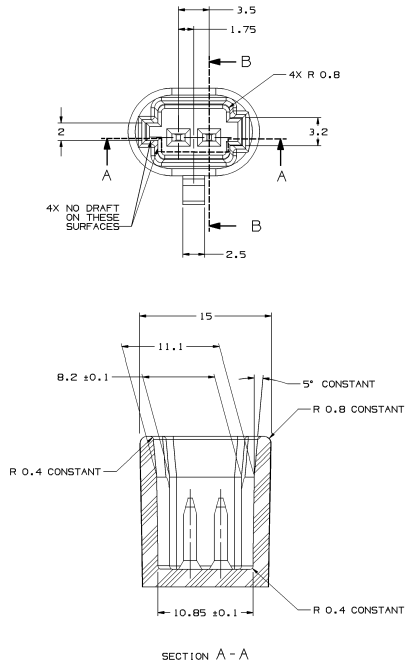

SECTION A-A

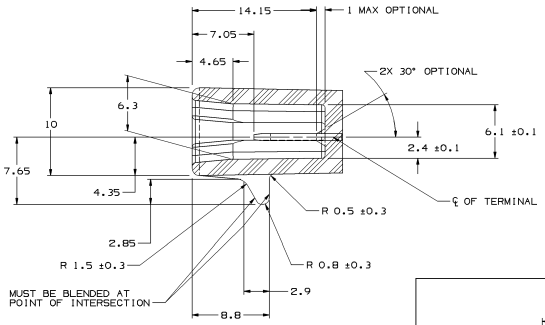

SECTION B-B

NOTES

1. UNLESS OTHERWISE SPECIFIED AND/OR INDICATED: DIMENSIONS ARE TO FACE OF VIEW SHOWN AND AUTOMATICALLY ROUNDED BY COMPUTER FOR INSPECTION. (SEE MATH MODEL FOR PRECISE DIMENSIONS.) FOR ALL OTHER DIMENSIONS NOT SHOWN BUT REQUIRED FOR TOOL BUILD, SEE MATH MODEL FOR PRECISE TOOL PATH DATA. ALL RADII 0.4
2. RECOMENDED MATERIAL GLASS REINFORCED NYLON OR POLYESTER.
3. WHEN USING THIS INFORMATION FOR A NEW DESIGN REQUEST THE LATEST COPY OF THIS PRINT FROM PACKARD ELECTRIC DIVISION.

MATING CONNECTOR INFORMATION

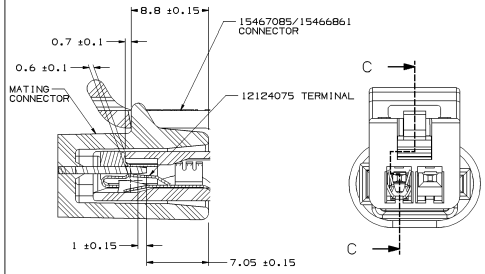

TERMINAL OVER TRAVEL 0.85 ± 0.65

SECTION C-C

STACK ANALYSIS VIEW

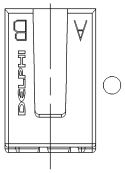

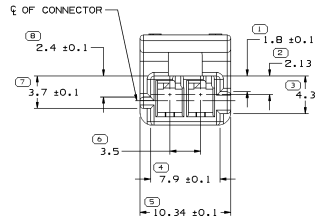

TYPE 101

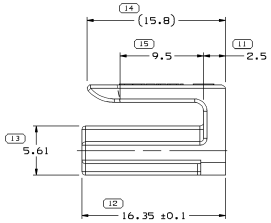

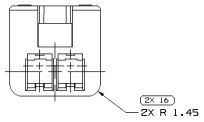

NOTES

1. UNLESS OTHERWISE SPECIFIED AND/OR INDICATED: DIMENSIONS ARE TO FACE OF VIEW SHOWN AND AUTOMATICALLY ROUNDED BY COMPUTER FOR INSPECTION. (SEE MATH MODEL FOR PRECISE DIMENSIONS.) FOR ALL OTHER DIMENSIONS NOT SHOWN BUT REQUIRED FOR TOOL BUILD. SEE MATH MODEL FOR PRECISE TOOL PATH DATA.
2. MAXIMUM CABLE DIAMETER 2.72 MM.
3. WHEN PARTS ARE TO BE SHIPPED THEY MUST BE PACKED IN PLASTIC BAGS OR SHIPPING CONTAINERS MUST BE LINED WITH PLASTIC LINERS. BAGS OR LINERS MUST BE SEALED TO AVOID ENTRY OF FOREIGN MATTER.
4. (1.5)X(0.1) DELPHI CORPORATE BRAND TO BE LOCATED ON ANY EXTERIOR SURFACE, PREFERABLY VISIBLE AT FINAL ASSEMBLY. OPTIONAL CONSTRUCTION TO BE "NO LOGO".
5. THIS PRODUCT IS NOT CATEGORIZED AS AN APPEARANCE ITEM, MINOR IMPERFECTIONS INCLUDING, BUT NOT LIMITED TO, FLOW MARKS, COLOR BLEMISHES, GATE VESTIGE, AND SOFT FLASH THAT DO NOT AFFECT THE FIT, FORM, OR FUNCTION OF THE PART ARE PERMISSIBLE PER NAP 4.10-18.
6. FOR APPLICATION DATA SEE THE INDIVIDUAL APPLICATION DRAWINGS.

PART NO	REV	N/P	STATUS	TYPE	MATERIAL SPECIFICATION AND COLOR	VOL CM³
15467085	01	AC		101	POLYAMIDE COMPOUND GRAY	0.753
15466861	01	AC		102	POLYAMIDE COMPOUND GRAY	0.806

DIMENSIONAL RANGE (MM)									
FROM	> 0	> 20	> 30	> 70	>100	>150	>200	>250	>300
TO	20	30	70	100	150	200	250	300	400
TOLERANCE UNLESS OTHERWISE SPECIFIED									
±0.15	±0.2	±0.25	±0.3	±0.4	±0.5	±0.8	±1	±1.2	
ANGULAR TOLERANCE ±0°									

DWG TYPE: PART DRAWING

STYLE

VOLUME (CM³): SEE CHART

DISTR CODE

UNLESS OTHERWISE SPECIFIED

THIS DOCUMENT IS IN ACCORDANCE WITH ASME Y14.5M-1994 AS AMENDED BY THE ON GLOBAL DIMENSIONING AND TOLERANCING ADDENDUM.(REF). SEPARATE PATTERNS OF DIMENSIONS MAY BE GIVEN SEPARATELY PROVIDED OF DATUM REFERENCES.

ALL DIMENSIONS ARE IN MILLIMETERS

REFERENCE

5 PROCESS SENSITIVE DIMENSION

DIMENSIONS ENCLOSED IN ( ) INDICATE REFERENCE DIMENSION AND NO TOLERANCE LIMITS ARE ESTABLISHED

THIRD ANGLE PROJECTION

DO NOT SCALE

USE MATH DATA

NX

DELPHI

DELPHI PACKARD ELECTRICAL/ELECTRONIC ARCHITECTURE
WARREN, OH

		DATE
DR		
AP/D1	E. GARCIA	26JN03
AP/D2	E. GARCIA	26JN03
AP/D3	G. MACIAS	26JN03
AP/D4		
AP/D5		

SUBSTANCES OF CONCERN AND RECYCLED CONTENT PER DELPHI (194900)

MATERIAL: SEE CHART

DRAWING NAME: TAXI CONN F M/P 150.2

DRAWING NUMBER: 15473840

SIZE	SCALE	FRAME NO	SHEET NO	STS	REV	N/P
A0	5:1	1 OF 1	1 OF 1	R	04	-

Date: 25-Feb-2008 Time: 08:32