SYMBOL DEFINITION		
A DIMENSION WITHOUT AN INSPECTION REPORT SYMBOL (□) DOES NOT REQUIRE INSPECTION. IT MAY BE CONTROLLED ON THE INDIVIDUAL COMPONENT DRAWING.	TOTAL NO OF INSPECTIONS REQUIRED	13
	LAST NO. USED	12

MISSING SYMBOLS
9

DWG STATUS						REVISION HISTORY	AUTH	DR	APVD/	APVD/
DATE	STG	REV	N/P	CHG	ZONE				1	2
15AU03	R	01	-	-		PART DRAWING CREATED	244533	BRB	BRB	MDM
30APO4	R	02	-	-		15466325 - ADDED (5317832 CPA TO NOTE #5 AND REMOVED CPA COLUMN FROM CHART	254577	TLD	TLD	MEF
30JUN04	R	03	-	-		ADDED NOTE 6	256603	PCP	BRB	MEF
19JL05	R	04	-	-		ADDED NOTE 7, REMOVED TPA COLUMN FROM ASSEMBLY CHART, REVISED NOTE 5	270090	DAD	DAD	MEF
31OCT12	R	05	-	-		15466325 - ADDED PERFORMANCE REQUIREMENT AND APPLICATION DATA NOTES	420252	IMF	JAA	DGL
16MR18	R	06				15466325 - REMOVED OPTIONAL INDEX DIMENSIONS	439262	AHS	AHS	HV

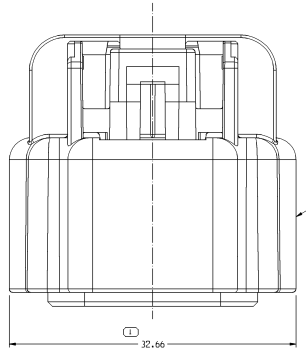

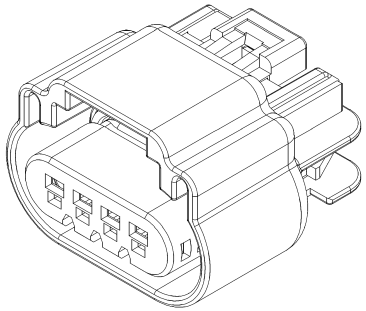

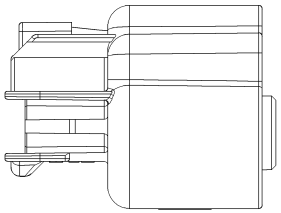

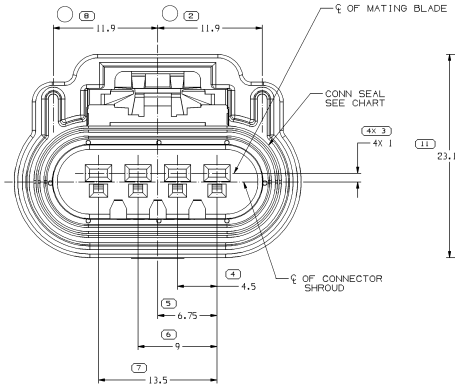

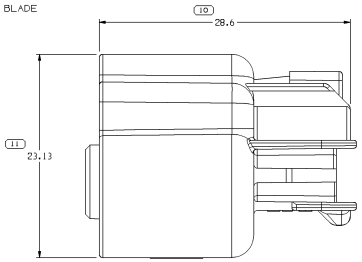

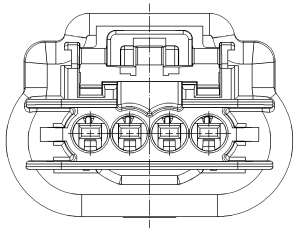

TYPE 101

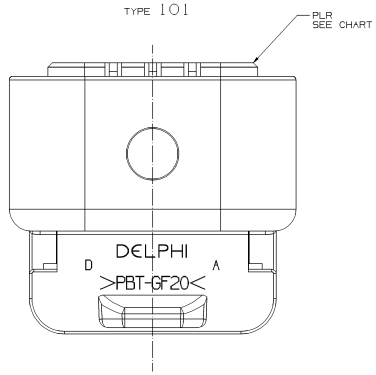

NOTES

1. UNLESS OTHERWISE SPECIFIED AND/OR INDICATED:

   DIMENSIONS ARE TO FACE OF VIEW SHOWN AND AUTOMATICALLY ROUNDED BY COMPUTER FOR INSPECTION (SEE MATH MODEL FOR PRECISE DIMENSIONS). FOR ALL OTHER DIMENSIONS NOT SHOWN BUT REQUIRED FOR TOOL BUILD, SEE MATH MODEL FOR PRECISE TOOL PATH DATA.

2. WHEN PARTS ARE SHIPPED THEY MUST BE PACKED IN PLASTIC BAGS OR SHIPPING CONTAINERS MUST BE LINED WITH PLASTIC LINERS. BAGS OR LINERS MUST BE SEALED TO AVOID FOREIGN MATTER.

3. SEALING CODE 3 - DESIGN WILL PASS SALT FOG AND IMMERSION TEST AFTER CONDITIONING AS SPECIFIED IN ESA-644 (WEATHER-PACK),ESA-710 (METRI-PACK), ESA-650 (UNDERHOOD MICRO-PACK), C-4006 (WORLD CONNECTOR), ETC WHEN MATED TO MATING PART OR EQUIVALENT

4. THIS PART IS NOT CONTROLLED FOR AUTOMATIC FEEDING.

5. THIS CONNECTION MEETS OR EXCEEDS SAE/USCAR-2 AUGUST 1997, SECTION 5.3.1.2, TERMINAL DISENGAGE CRITERIA WITH THE APPLICATION OF A TERMINAL POSITION ASSURANCE (TPA) SECONDARY LOCK.

6. FOR APPLICATION DATA SEE THE INDIVIDUAL APPLICATION DRAWINGS.

7. AVERAGE FORCE REQUIRED TO MOVE CPA FROM LOCKED POSITION IS 40N.

8. THIS PRODUCT IS NOT CATEGORIZED AS AN APPEARANCE ITEM, MINOR IMPERFECTIONS INCLUDING, BUT NOT LIMITED TO, FLOW MARKS, COLOR BLEMISHES, GATE VESTIGE, AND SOFT FLASH THAT DO NOT AFFECT THE FIT, FORM, OR FUNCTION OF THE PART ARE PERMISSIBLE PER DPNP-4.7-CS-01.

15466325	01	AE	101	15466323	15326817	15326818
PART NO	REV	N/P	TYPE	CONNECTOR	PLR	CONN SEAL

| DIMENSIONAL RANGE (MM) | | | | | |