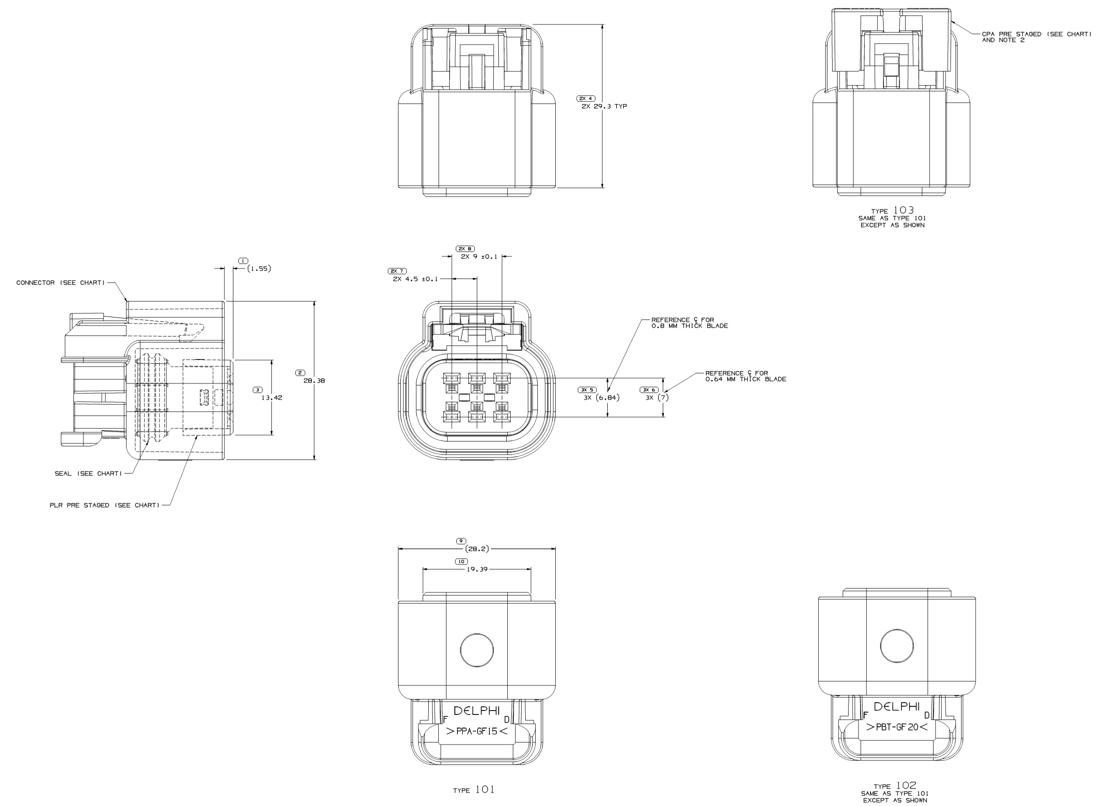

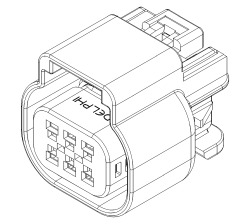

SYMBOL DEFINITION		
A DIMENSION WITHOUT AN INSPECTION REPORT SYMBOL ( ) DOES NOT REQUIRE INSPECTION. IT MAY BE CONTROLLED ON THE INDIVIDUAL COMPONENT DRAWING.	TOTAL NO OF INSPECTIONS REQUIRED	17
	LAST NO. USED	10

MISSING SYMBOLS: NO MISSING SYMBOL NUMBER

DATE	STG	REV	N/P	CHG	ZONE	REVISION HISTORY	AUTH	DR	APVD 1	APVD 2
16AU01	R	01	-	-		15355297 - WAS SEPARATE DRAWING AND 15418497 - RELEASED	212866	AMG	AMG	MB
23SE05	R	02	-	-		ALL PARTS - UPDATED NOTE #4 AND REMOVED SEALING CODE NOTE	272680	MDH	AUG	CSD
24JA06	R	03	-	-		ALL PARTS - UPDATED NOTE #4 AND ADDED COLOR COLUMN TO CHART	276578	MDH	FRG	CSD
17NO06	R	04	-	-		15418497 - PLR WAS 15418499 AND COLOR WAS LT GRA	285910	MM	MM	CSD
11DE06	R	05	-	-		15355297 - REVISED STATUS TO RESTRICTED	287772	RJD	RJD	CSD
29MY07	U	06	-	-		ADDED 13649663 - RELEASED	401507	RH	RH	CSD
01JN07	R	07	-	-		PT 13649663 TYPING ERROR IN CHART CONNSEAL 15355295 WAS 13535295	401573	WHC	WHC	CSD
19JN07	R	08	-	-		ALL PARTS - ADDED NOTE 5 & 6, REVISED TYPE 102 AND 103 GRAPHICS AND NOTE 2 & 4	401731	PCP	PCP	CSD
11SE09	R	09	-	-		13723323 & 13723329 - WERE ON TAXI DWG 15336626	408934	VMR	MAC	VMR
10JA12	R	10	-	-		ALL PARTS - REMOVED COLOR COLUMN FROM CHART AND ADDED PERFORMANCE REQUIREMENT NOTE	416644	CBG	CBG	DGL

NOTES

1. UNLESS OTHERWISE SPECIFIED AND/OR INDICATED:

   DIMENSIONS ARE TO FACE OF VIEW SHOWN AND AUTOMATICALLY ROUNDED BY COMPUTER FOR INSPECTION (SEE MATH MODEL FOR PRECISE DIMENSIONS). FOR ALL OTHER DIMENSIONS NOT SHOWN BUT REQUIRED FOR TOOL BUILD, SEE MATH MODEL FOR PRECISE TOOL PATH DATA.

2. PARTS ARE TO BE ASSEMBLED WITH SEAL IN PLACE AND THE C.P.A. IN THE PRE-STAGED POSITION.

3. WHEN PARTS ARE SHIPPED THEY MUST BE PACKED IN PLASTIC BAGS OR SHIPPING CONTAINERS MUST BE LINED WITH PLASTIC LINERS. BAGS OR LINERS MUST BE SEALED TO AVOID FOREIGN MATTER.

4. THIS PRODUCT IS NOT CATEGORIZED AS AN APPEARANCE ITEM, MINOR IMPERFECTIONS INCLUDING, BUT NOT LIMITED TO, FLOW MARKS, COLOR BLEMISHES, GATE VESTIGE, AND SOFT FLASH THAT DO NOT AFFECT THE FIT, FORM, OR FUNCTION OF THE PART ARE PERMISSIBLE PER DPNP-4.7-CS-01.

5. FOR APPLICATION DATA SEE THE INDIVIDUAL APPLICATION DRAWINGS.

6. THIS CONNECTION MEETS OR EXCEEDS SAE/USCAR-2 AUGUST 1997; SECTION 5.3.1.2; TERMINAL DISENGAGE CRITERIA WITH THE APPLICATION OF A TERMINAL POSITION ASSURANCE (TPA) SECONDARY LOCK.

PART NO	REV	N/P	TYPE	STATUS	CONNECTOR	PLR	CONN SEAL	CPA	RESTRICTED USAGE	REPLACED BY
13723323	01	AB	103	-	15355294	15355296	15355295	15317832	-	-
13723329	01	AB	103	-	15418498	15355296	15355295	15317832	-	-
13649663	01	AC	103	-	15418498	15355296	15355295	15317832	-	-
15418497	01	AE	102	-	15418498	15355296	15355295	-	-	-
15355297	02	AF	101	-	15355294	15355296	15355295	-	RESTRICTED	15418497

(2) PROCESS SENSITIVE DIMENSION

DIMENSIONS ENCLOSED IN ( ) INDICATE REFERENCE DIMENSIONS AND NO TOLERANCE LIMITS ARE ESTABLISHED

DWG TYPE: PART DRAWING

STYLE

VOLUME (CM³) — DISTR CODE: D

UNLESS OTHERWISE SPECIFIED

THIS DOCUMENT IS IN ACCORDANCE WITH ASME Y14.5M-1994 AS AMENDED BY THE GM GLOBAL DIMENSIONING AND TOLERANCING ADDENDUM-2001. SEPARATE PATTERNS OF FEATURES MAY BE GAGED SEPARATELY REGARDLESS OF DATUM REFERENCES.

ALL DIMENSIONS ARE IN MILLIMETERS

REFERENCE

THIRD ANGLE PROJECTION

DO NOT SCALE — USE MATH DATA — CAD NX

DELPHI

DELPHI PACKARD ELECTRICAL/ELECTRONIC ARCHITECTURE
WARREN, OH

		DATE
DR		
APVD1	ANDRES MENDEZ	16AU01
APVD2	ANDRES MENDEZ	16AU01
APVD3	M. BRUMBACH	20AU01
APVD4		
APVD5		

SUBSTANCES OF CONCERN AND RECYCLED CONTENT PER DELPHI 10949001

MATERIAL: SEE DRAWING

DRAWING NAME: TAXI ASM CONN F GT 150 SLD

DRAWING NUMBER: 15418500

SIZE	SCALE	FRAME NO	SHEET NO	STG	REV	N/P
A1x3	5:1	1 OF 2	1 OF 1	R	10	-

12418200