SYMBOL DEFINITION			MISSING SYMBOLS
A DIMENSION WITHOUT AN INSPECTION REPORT SYMBOL ( ) DOES NOT REQUIRE INSPECTION. IT MAY BE CONTROLLED ON THE INDIVIDUAL COMPONENT DRAWING.	TOTAL NO OF INSPECTIONS REQUIRED	7	NO MISSING SYMBOL NUMBER
	LAST NO. USED	7	

DWG STATUS DATE	STG	REV	N/P	CHG	ZONE	REVISION HISTORY	AUTH	DR	APVD 1	APVD 2
27AP15	R	02	-	-		ALL PARTS - CLEAR REV COLUMN, REDRAWN MVL DWG TO PART DRAWING, ADDED NOTES #1-3 AND REMOVED "MATING P/N" & "APPLICABLE COMPONENTS" CHARTS	429298	CGD	CGD	JGR

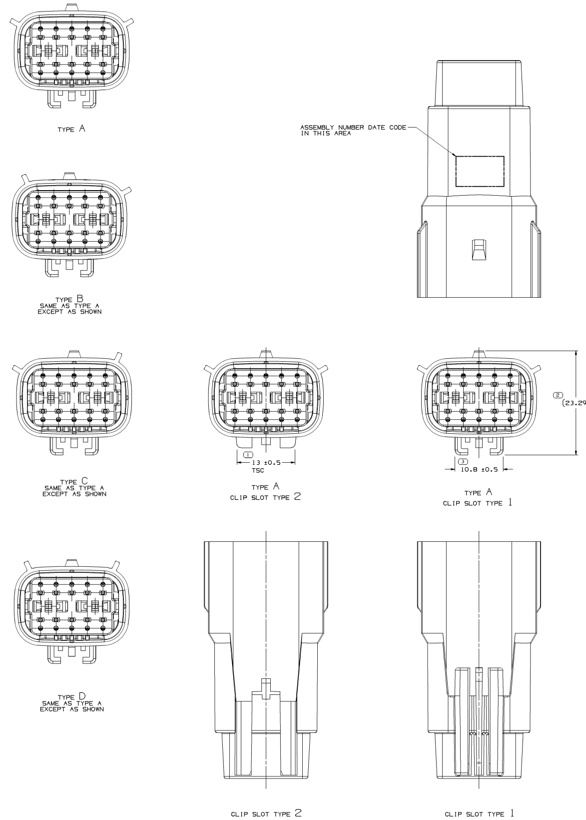

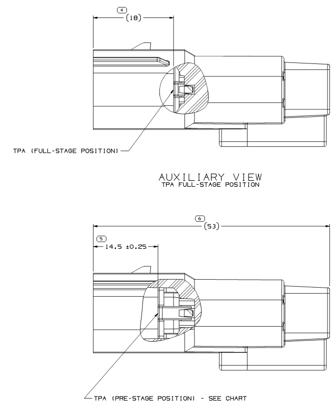

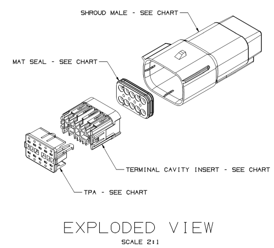

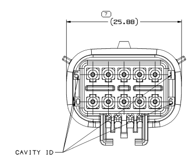

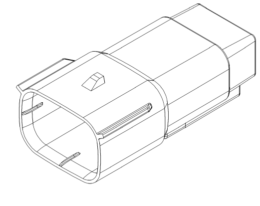

ASSEMBLY MVL PART NO	MVL REV	DELPHI PART NO	DELPHI REV	N/P	KEY OPTIONS	COLOR	CLIP SLOT	HOUSING MVL PART NO	HOUSING DELPHI PART NO	MAT SEAL MVL PART NO	MAT SEAL DELPHI PART NO	TERMINAL CAVITY INSERT MVL PART NO	TERMINAL CAVITY INSERT DELPHI PART NO	TPA MVL PART NO	TPA DELPHI PART NO	PLUGGED (X) SEAL POSITIONS 1	2	3	4	5	6	7	8	9	10	TOTAL OPEN CIRCUITS
54241000	D	13763996	01	AA	A	BLACK	1	54241058	33503595	54241089	33504639	54241085	33503607	54241084	33503738											10
54241001	D	13771870	01	AA	B	GREY	1	54241059	33503596	54241089	33504639	54241085	33503607	54241084	33503738											10
54241002	D	33500123	01	AA	C	BROWN	1	54241060	33503597	54241089	33504639	54241085	33503607	54241084	33503738											10
54241003	D	33500124	01	AA	D	GREEN	1	54241061	33503598	54241089	33504639	54241085	33503607	54241084	33503738											10
54241004	D	33500125	01	AA	A	BLACK	2	54241062	33503599	54241089	33504639	54241085	33503607	54241084	33503738											10
54241005	D	33500126	01	AA	B	GREY	2	54241063	33503600	54241089	33504639	54241085	33503607	54241084	33503738											10
54241006	D	33500127	01	AA	C	BROWN	2	54241064	33503601	54241089	33504639	54241085	33503607	54241084	33503738											10
54241007	D	33500128	01	AA	D	GREEN	2	54241065	33503602	54241089	33504639	54241085	33503607	54241084	33503738											10
54241008	D	13672213	01	AA	A	BLACK	1	54241050	33503587	54241089	33504639	54241085	33503607	54241084	33503738					X						9
54241009	D	33500129	01	AA	B	GREY	1	54241051	33503588	54241089	33504639	54241085	33503607	54241084	33503738					X						9
54241010	D	33500130	01	AA	A	BLACK	2	54241054	33503591	54241089	33504639	54241085	33503607	54241084	33503738					X						9
54241011	D	33500131	01	AA	B	GREY	2	54241055	33503592	54241089	33504639	54241085	33503607	54241084	33503738					X						9
54241012	D	13672211	01	AA	A	BLACK	1	54241050	33503587	54241089	33504639	54241085	33503607	54241084	33503738					X	X					8
54241013	D	33500132	01	AA	B	GREY	1	54241051	33503588	54241089	33504639	54241085	33503607	54241084	33503738					X	X					8
54241014	D	33500133	01	AA	A	BLACK	2	54241054	33503591	54241089	33504639	54241085	33503607	54241084	33503738					X	X					8
54241015	D	33500134	01	AA	B	GREY	2	54241055	33503592	54241089	33504639	54241085	33503607	54241084	33503738					X	X					8
54241016	E	33511329	01	AA	A	BLACK	1	54241050	33503587	54241089	33504639	54241085	33503607	54241084	33503738	X	X			X	X		X	X	X	3
54241017	E	33511330	01	AA	A	BLACK	1	54241050	33503587	54241089	33504639	54241085	33503607	54241084	33503738	X	X			X	X			X	X	4
54241018	F	33511331	01	AA	A	BLACK	2	54241054	33503591	54241089	33504639	54241085	33503607	54241084	33503738							X	X	X	X	6
54241019	G	33511332	01	AA	A	BLACK	1	54241050	33503587	54241089	33504639	54241085	33503607	54241084	33503738	X	X			X	X					6
54241020	G	33511333	01	AA	A	BLACK	1	54241050	33503587	54241089	33504639	54241085	33503607	54241084	33503738								X	X		8
F606300	J	13779746	01	AA	A	BLACK	1	54241050	33503587	54241089	33504639	54241085	33503607	54241084	33503738										X	9
-	-	33400413	01	AA	A	BLACK	1	54241050	33503587	54241089	33504639	54241085	33503607	54241084	33503738	X	X	X	X	X	X	X	X	X	X	0
-	-	33400414	01	AA	A	BLACK	2	54241054	33503591	54241089	33504639	54241085	33503607	54241084	33503738	X	X	X	X	X	X	X	X	X	X	0
-	-	33400415	01	AA	B	GREY	1	54241051	33503588	54241089	33504639	54241085	33503607	54241084	33503738	X	X	X	X	X	X	X	X	X	X	0
-	-	33400416	01	AA	B	GREY	2	54241055	33503592	54241089	33504639	54241085	33503607	54241084	33503738	X	X	X	X	X	X	X	X	X	X	0

DRAWING NUMBER						
13779810						
SIZE	SCALE	FRAME NO	SHEET NO	STG	REV	N/P
A1x3	4:1	2 OF 1	1 OF 1	R	02	-

NOTES

1. UNLESS OTHERWISE SPECIFIED AND/OR INDICATED:
   DIMENSIONS ARE TO FACE OF VIEW SHOWN AND AUTOMATICALLY ROUNDED BY COMPUTER FOR INSPECTION (SEE MATH MODEL FOR PRECISE DIMENSIONS). FOR ALL OTHER DIMENSIONS NOT SHOWN BUT REQUIRED FOR TOOL BUILD, SEE MATH MODEL FOR PRECISE TOOL PATH DATA.
2. THIS PRODUCT IS NOT CATEGORIZED AS AN APPEARANCE ITEM, MINOR IMPERFECTIONS INCLUDING, BUT NOT LIMITED TO, FLOW MARKS, COLOR BLEMISHES, GATE VESTIGE, AND SOFT FLASH THAT DO NOT AFFECT THE FIT, FORM, OR FUNCTION OF THE PART ARE PERMISSIBLE PER DPNP-4.7-CS-01.
3. FOR APPLICATION DATA SEE THE INDIVIDUAL APPLICATION DRAWINGS.
4. MAXIMUM TEMPERATURE CLASS:
   CLASS 3 (125°C)
5. TEST METHOD PER:
   SAE/USCAR-2 REV-4
   SAE/USCAR-20 REV-2
6. CONNECTOR MAY BE USED WITH THE FOLLOWING RANGE OF WIRE SIZES/TYPES:
   -SIZE: 22 GAGE - 16 GAGE - 1.50mm MIN O.D. TO 2.41mm MAX O.D.
   -TYPE: TXL (MIL123-A /MS-8288)
   -CONTACT DELPHI ENGINEERING REGARDING USE OF OTHER WIRE TYPES AND/OR SIZES
7. ANNUAL QUALITY REQUIREMENTS:
   IT IS PERMISSIBLE TO PERFORM CONTINUOUS CONFORMANCE PER DELPHI SPECIFICATION MVL #AQA-001 INSTEAD OF ANNUAL LAYOUT AND ANNUAL PV REQUIREMENTS OF QS-9000 SECTION 2 AND SAE/USCAR-2 REV-4
8. TEST METHOD: SAE/USCAR-2 REV 4
   USCAR-20 REV 2

DIMENSIONAL RANGE (MM)									CHART E1
FROM / TO	>0 / 20	>20 / 30	>30 / 70	>70 / 100	>100 / 150	>150 / 200	>200 / 250	>250 / 300	>300 / 400
TOLERANCE UNLESS OTHERWISE SPECIFIED	±0.15	±0.2	±0.3	±0.4	±0.5	±0.6	±0.8	±1	±1.2
ANGULAR TOLERANCE ±2°									

(N/A) PROCESS SENSITIVE DIMENSION

DIMENSIONS ENCLOSED IN ( ) INDICATE REFERENCE DIMENSIONS AND NO TOLERANCE LIMITS ARE ESTABLISHED

A LINE DRAWN THROUGH A PART NUMBER INDICATES THAT PHYSICAL PARTS ARE NOT AVAILABLE FOR ORDERING.

PART NUMBERS THAT DO NOT HAVE A LINE PRESENT INDICATE THAT PHYSICAL PARTS ARE AVAILABLE FOR ORDERING.

CONTACT DELPHI SALES TO ASSURE AVAILABILITY OF PARTS.

DWG TYPE: PART DRAWING

STYLE

VOLUME (CM³) — DISTR CODE: D

UNLESS OTHERWISE SPECIFIED
THIS DOCUMENT IS IN ACCORDANCE WITH ASME Y14.5M-1994 AS AMENDED BY THE GM GLOBAL DIMENSIONING AND TOLERANCING ADDENDUM-2001. SEPARATE PATTERNS OF FEATURES MAY BE GAGED SEPARATELY REGARDLESS OF DATUM REFERENCES.

ALL DIMENSIONS ARE IN MILLIMETERS

REFERENCE: K54001

THIRD ANGLE PROJECTION — DO NOT SCALE — USE MATH DATA — CAD NX

DELPHI

DELPHI PACKARD ELECTRICAL/ELECTRONIC ARCHITECTURE
WARREN, OH

COPYRIGHT 2014 DELPHI CORPORATION AND/OR ITS AFFILIATES.
ALL RIGHTS RESERVED.
REVISED 2015
THIS DRAWING IS THE PROPERTY OF DELPHI CORPORATION AND CONTAINS DELPHI CONFIDENTIAL INFORMATION. THE REPRODUCTION, DISTRIBUTION AND UTILIZATION OF THIS DOCUMENT OR ITS RELATED CAD MATH DATA, AS WELL AS COMMUNICATION OF ANY CONTENT TO OTHERS, WITHOUT EXPRESS AUTHORIZATION, IS PROHIBITED.

		DATE
DR	RAMA K	29DE03
APVD1	SUCHA SIAN	01AP14
APVD2	MATT MAJOR	01AP14
APVD3	BOB CUE	01AP14
APVD4		
APVD5		

SUBSTANCES OF CONCERN AND RECYCLED CONTENT PER DELPHI 10949001

MATERIAL: SEE DRAWING

DRAWING NAME: TAXI ASM CONN 10 M APEX 1.5 SLD

DRAWING NUMBER						
13779810						
SIZE	SCALE	FRAME NO	SHEET NO	STG	REV	N/P
A1x3	4:1	1 OF 1	1 OF 1	R	02	-

13779810