SYMBOL DEFINITION			MISSING NUMBERS
THE NUMBER INSIDE THE SYMBOL ( ) CORRESPONDS TO THE NUMBER ON THE INSPECTION REPORT FOR THIS DRAWING/PART NUMBER	TOTAL NO. OF SYMBOLS ON DRAWING	7	
	LAST NO. USED	7	

DWG STATUS DATE	STS	REV	N/P	CHG	ZONE	REVISION HISTORY	AUTH	DR	AP/D1	AP/D2
09DE99	R	01	-	-		ALL PARTS REDRAWN	000009	DRR	DRR	JR
21MY03	R	02	-	-		ALL PARTS - ADDED NOTES (2 PLCS) AND REVISED MAT'L SPEC & PSD	239916	EGR	EGR	GM
29JL03	R	03	-	-		ALL PARTS - UPDATED PDM ATRIBUTTES	243944	JYD	JYD	GMC
24SE03	R	04	-	-		12191046 - OBSOLETE	245886	ADK	HAM	RMD
16DE04	R	05	-	-		ALL ACTIVE PARTS - ADDED BLEND RADIUS 4 PLCS TO LOCK FEATURE	262587	RH	RH	BG
16MY06	R	06	-	-		ALL ACTIVE PARTS-UPDATED PDM ATTRIBUTES	280077	RH	RH	BDG
08SE06	R	07	-	-		12064761 - ADDED NOTES #4 & #5	284375	JS	JS	BG

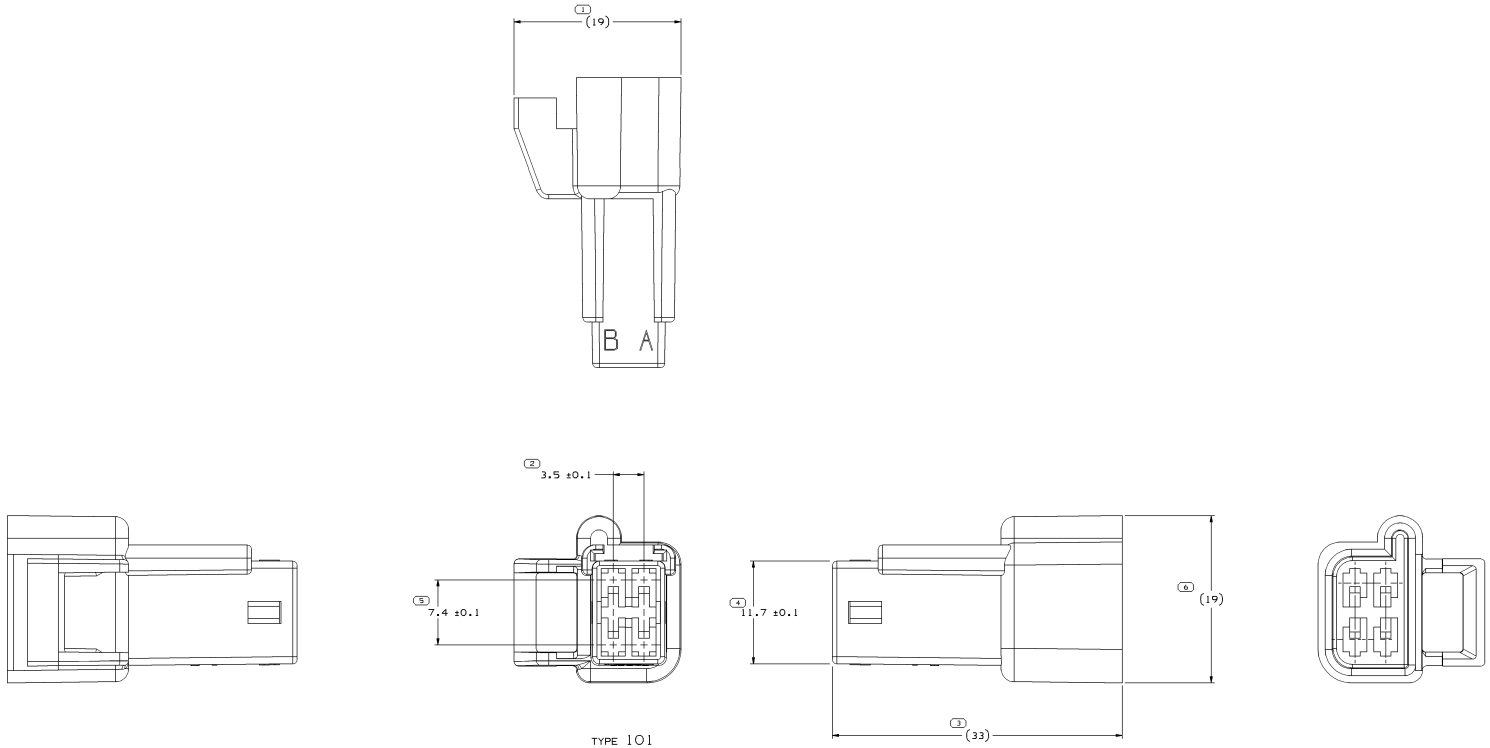

TYPE 101

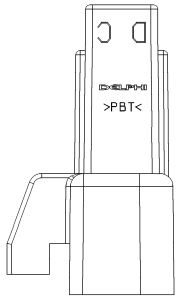

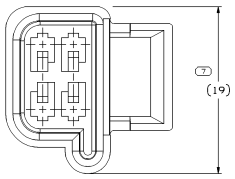

TYPE 102
SAME AS TYPE 101
EXCEPT AS SHOWN

NOTES

1. UNLESS OTHERWISE SPECIFIED AND/OR INDICATED:
   DIMENSIONS ARE TO FACE OF VIEW SHOWN AND AUTOMATICALLY ROUNDED BY COMPUTER FOR INSPECTION. (SEE MATH MODEL FOR PRECISE DIMENSIONS.) FOR ALL OTHER DIMENSIONS NOT SHOWN BUT REQUIRED FOR TOOL BUILD, SEE MATH MODEL FOR PRECISE TOOL PATH DATA.
   ALL RADII 0.5
   DRAFT IS 0.5° ON ALL OUTSIDE SURFACES
   LIKE CAVITIES ARE IDENTICAL

2. MATERIAL RECYCLING CODE >SEE CHART< PER SAE J1344. (2.3)X(0.1) RAISED CHARACTERS AS SHOWN TO BE LOCATED ON ANY EXTERIOR SURFACE. OPTIONAL CONSTRUCTION TO BE NO MATERIAL RECYCLING CODE.

3. (2.3)X(0.1) RAISED DELPHI CORPORATE BRAND TO BE LOCATED ON ANY EXTERIOR SURFACE, PREFERABLY VISIBLE AT FINAL ASSEMBLY. OPTIONAL CONSTRUCTION TO BE "PED" OR NO LOGO.

4. THIS PART ACCEPTS THE FOLLOWING COMPONENTS OR EQUIVALENT:

   TERMINAL 15317765
   SECONDARY TERMINAL LOCK 12047787

5. THIS CONNECTOR LIMITED TO A MAX INSULATION CRIMP 3 HIGH AND 2.6 WIDE.

SCALE 1:1

PART NO	REV	N/P	STATUS	MATERIAL SPECIFICATION AND COLOR	TYPE	MATING PART	VOLUME CM³
12191046	A4	-	OBSOLETE	M3592006 - PA66 HS IM YEL	102	-	2.555
12064761	03	AB		M4695002 - PBT BLK	101	12064760	2.554

DIMENSIONAL RANGE (MM)											
FROM	> 0	> 20	> 30	> 70	>100	>150	>200	>250	>300		
TO	20	30	70	100	150	200	250	300	400		
TOLERANCE UNLESS OTHERWISE SPECIFIED											
±0.15	±0.2	±0.3	±0.4	±0.5	±0.6	±0.8	±1	±1.2			
ANGULAR TOLERANCE ±0°											

4 PROCESS SENSITIVE DIMENSION

DIMENSIONS ENCLOSED IN ( ) INDICATE REFERENCE DIMENSION AND NO TOLERANCE LIMITS ARE ESTABLISHED

THIRD ANGLE PROJECTION

DO NOT SCALE

USE MATH DATA

DWG TYPE: PART DRAWING

STYLE

VOLUME (CM³): SEE CHART

DISTR CODE

UNLESS OTHERWISE SPECIFIED

THIS DOCUMENT IS IN ACCORDANCE WITH ASME Y14.5M-1994 AS AMENDED BY THE SAE GLOBAL DIMENSIONING AND TOLERANCING DIVISION. THIS DOCUMENT, ALL DEPARTMENTS REFERENCED THEREIN, AND ALL DATA CONTAINED IN THIS FORM IS MADE DOES NOT VARY WITH RELATIONSHIP BETWEEN FEATURES IS ESTABLISHED BY INTERPRETATION OF LOCATION TOLERANCES. SEPARATE POSITION DATUMS MAY BE SHARED SEPARATELY, WITHOUTHOUT OF DATUM REFERENCE.

ALL DIMENSIONS ARE IN MILLIMETERS

REFERENCE

DELPHI

DELPHI PACKARD ELECTRIC SYSTEMS
WARREN, OH

		DATE
DR		
AP/D1	G. HORCHLER	08AU95
AP/D2	J. WINGER	08AU95
AP/D3	G. RONCONE	22AU95
AP/D4		
AP/D5		

SUBSTANCES OF CONCERN AND RECYCLED CONTENT PER DELPHI (DP4900)

MATERIAL: SEE CHART

DRAWING NAME: TAXI CONN M M/P 150

DRAWING NUMBER: 12191043

SIZE	SCALE	FRAME NO	SHEET NO	STS	REV	N/P
A0	5:1	1 OF 1	1 OF 1	R	07	-

Date: 22Jul20
Jobs: 12191043-0001-001 Date: 11-Sep-06 Time: 07:16
Message: