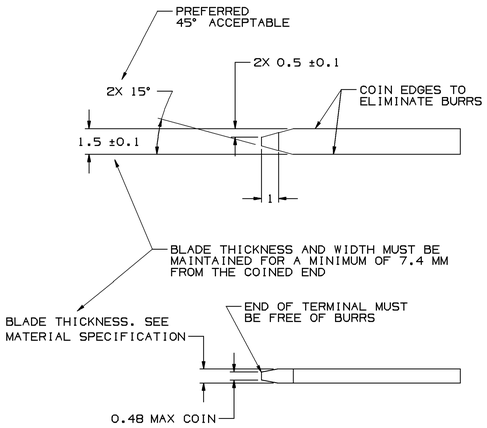

MATERIAL SPECIFICATION

RECOMMENDED
BASE METAL - CDA-210, GILDING, EXTRA SPRING TEMPER
PLATING - 0.0050 ±0.0025 MM THK TIN

MINIMUMS
ELECTRICAL CONDUCTIVITY - ≥ 20% IACS AT 20°C. USE OF A MATERIAL WITH CONDUCTIVITY < 20% IACS MUST BE APPROVED BY PACKARD ELECTRIC MATERIALS ENGINEERING.

TENSILE STRENGTH - 407 MPa

PLATING - FOR LOW ENERGY (≤ 5 V) AND NON-PASSENGER COMPARTMENT POWER CIRCUITS, 0.0050 ±0.0025 MM THICK TIN. FOR MATERIALS CONTAINING 10% OR MORE ZINC, AN UNDERPLATE OF COPPER 0.0050 ±0.0025 MM THICK IS REQUIRED.

BLADE THICKNESS
UNPLATED = 0.813 ±0.025
TIN PLATED = 0.823 ±0.030

MATING BLADE INFORMATION

SCALE 8:1

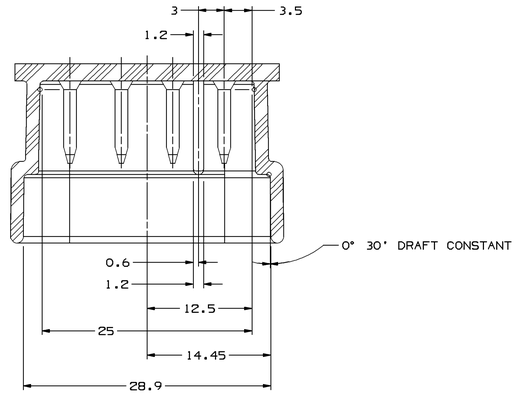

SECTION A-A

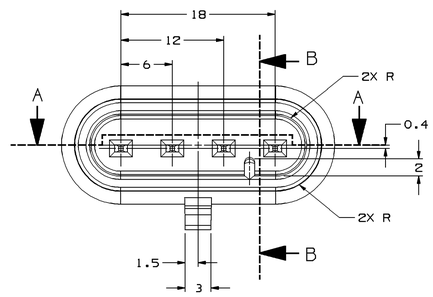

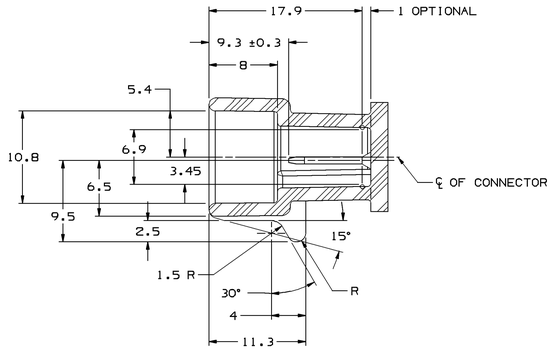

SECTION B-B

NOTES:

1. UNLESS OTHERWISE SPECIFIED AND/OR INDICATED:
   DIMENSIONS ARE TO FACE OF VIEW SHOWN AND
   AUTOMATICALLY ROUNDED BY COMPUTER FOR INSPECTION.
   (SEE MATH MODEL FOR PRECISE DIMENSION)
   FOR ALL OTHER DIMENSIONS NOT SHOWN BUT REQUIRED FOR
   TOOL BUILD, SEE MATH MODEL FOR PRECISE TOOL PATH DATA.
   ALL RADII 0.4
   DRAFT IS 1° ON ALL OUTSIDE SURFACES

MATING CONNECTOR INFORMATION

WHEN USING THIS INFORMATION FOR A NEW DESIGN, REQUEST THE LATEST COPY OF THIS PRINT FROM PACKARD ELECTRIC DIVISION

SYMBOL DEFINITION		
A DIMENSION WITHOUT AN INSPECTION REPORT SYMBOL ( ) DOES NOT REQUIRE INSPECTION. IT MAY BE CONTROLLED ON THE INDIVIDUAL COMPONENT DRAWING.	TOTAL NO OF INSPECTIONS REQUIRED	1
	LAST NO. USED	1

MISSING SYMBOLS
NO MISSING SYMBOL NUMBER

DWG STATUS					ZONE	REVISION HISTORY	AUTH	DR	APVD 1	APVD 2
DATE	STG	REV	N/P	CHG						
13DE95	R	01	-	-		12191366 - RELEASED TO REV A	950005	WTP	WTP	
13JA96	R	02	-	-		12191366 - ADDED ANTIBUNCHING LIP - TO REV B	170418	PHC	FKV	
0FE96	R	03	-	-		12191366 - REVISED - NO REV UPDATE REQ'D	170529	EBS	AUG	
17FE96	R	04	-	-		12191366 - REVISED - NO REV UPDATE REQ'D	170670	JVS	JVS	
16JL96	R	05	-	-		15305338 - RELEASED TO REV A	960005	JHV	JVS	
06SE96	R	06	-	-		15305338 - REVISED CONN GRAPHICS TO REV B AND MATH MODEL NOTE	174244	ROM	EBS	
07FE97	R	07	-	-		12191366 - REV LEVEL ADVANCED TO "B" PER ECN #170418	177772	PHC	FKV	
040C06	R	08	-	-		ALL PARTS - UPDATED PDM ATTRIBUTES	285271	TLD	TLD	ET

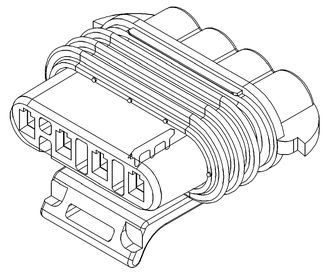

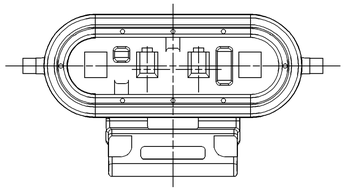

TYPE 202
SAME AS TYPE 201
EXCEPT AS SHOWN

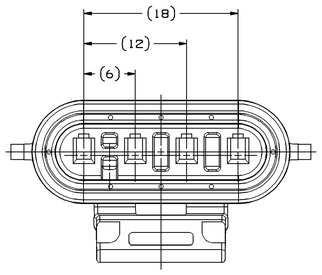

TYPE 201

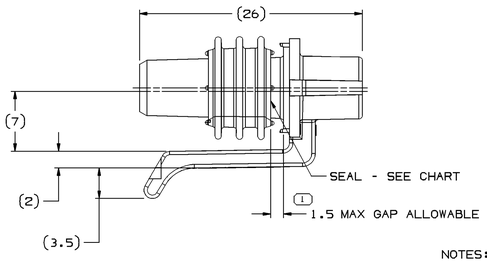

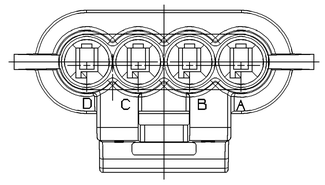

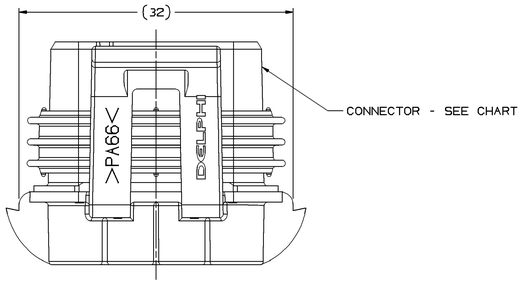

NOTES:

1. UNLESS OTHERWISE SPECIFIED AND/OR INDICATED:
   DIMENSIONS ARE TO FACE OF VIEW SHOWN AND
   AUTOMATICALLY ROUNDED BY COMPUTER FOR INSPECTION.
   (SEE MATH MODEL FOR PRECISE DIMENSION)
   FOR ALL OTHER DIMENSIONS NOT SHOWN BUT REQUIRED FOR
   TOOL BUILD, SEE MATH MODEL FOR PRECISE TOOL PATH DATA.
2. THIS PART ACCEPTS THE FOLLOWING COMPONENTS OR EQUIVALENT:
   TERMINAL 12048074
   SECONDARY TERMINAL LOCK 12047948
3. SEALING CODE 3.
4. WHEN PARTS ARE SHIPPED, THEY MUST BE PACKED IN PLASTIC BAGS OR SHIPPING CONTAINERS MUST BE LINED WITH PLASTIC LINERS. BAGS OR LINERS MUST BE SEALED TO AVOID ENTRY OF FOREIGN MATERIAL.
5. DIMENSIONS MARKED "REF" ARE FOR REFERENCE ONLY AND NO TOLERANCE LIMITS ARE ESTABLISHED.

PART NO	REV	STATUS	TYPE	CONNECTOR	SEAL	COLOR	BLOCKED CAVITIES
15305338	B2		202	15305337	12047949	BRN	A AND D
12191366	B4		201	12191365	12047949	LT GRAY	NONE

(N/A) PROCESS SENSITIVE DIMENSION

DIMENSIONS ENCLOSED IN ( ) INDICATE REFERENCE DIMENSIONS AND NO TOLERANCE LIMITS ARE ESTABLISHED

DIMENSIONAL RANGE (MM)												
FROM	> 0	> 20	> 30	> 70	>100	>150	>200	>250	>300	CHART ED		
TO	20	30	70	100	150	200	250	300	400			
TOLERANCE UNLESS OTHERWISE SPECIFIED												
±0.15	±0.2	±0.3	±0.4	±0.5	±0.6	±0.8	±1	±1.2				
ANGULAR TOLERANCE ±2°												

THIRD ANGLE PROJECTION

DO NOT SCALE
USE MATH DATA

UNIGRAPHICS

DWG TYPE
PART DRAWING

STYLE

VOLUME (CU^3) | DISTR CODE

UNLESS OTHERWISE SPECIFIED
THIS DOCUMENT IS IN ACCORDANCE WITH ASME Y14.5M-1994 AS AMENDED BY THE GM GLOBAL DIMENSIONING AND TOLERANCING ADDENDUM-2001. SEPARATE PATTERNS OF FEATURES MAY BE GAGED SEPARATELY REGARDLESS OF DATUM REFERENCES.

ALL DIMENSIONS ARE IN MILLIMETERS

REFERENCE

DELPHI
DELPHI PACKARD ELECTRIC SYSTEMS
WARREN, OH

		DATE
DR		
APVD1	W.TURNBULL	13DE95
APVD2	W.TURNBULL	13DE95
APVD3	K.MURPHY	23JA96
APVD4		
APVD5		

SUBSTANCES OF CONCERN AND RECYCLED CONTENT PER DELPHI 10949001

MATERIAL
SEE CHART

DRAWING NAME
TAXI ASM CONN F M/P 150 SLD

DRAWING NUMBER
12092575

SIZE	SCALE	FRAME NO	SHEET NO	STG	REV	N/P
A0	NONE	1 OF 1	2 OF 2	R	08	-

Part: 12092575-CU001-S02 Date: 12-Oct-06 Time: 13:32
Plot Date: 12/20/06
Plot Messages: