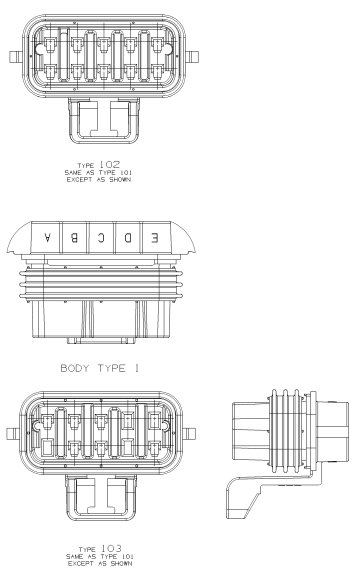

TYPE 102
SAME AS TYPE 101
EXCEPT AS SHOWN

BODY TYPE I

TYPE 103
SAME AS TYPE 101
EXCEPT AS SHOWN

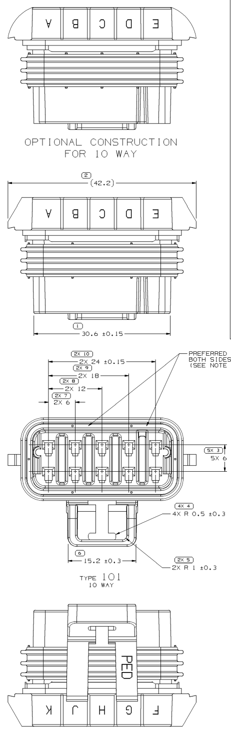

OPTIONAL CONSTRUCTION
FOR 10 WAY

TYPE 101
10 WAY

BODY TYPE II
SAME AS BODY TYPE I
EXCEPT WITH ANTI-BUNCHING
LIPS ON SHORT ENDS OF CONN
(REF CONN PRINT 12045809)

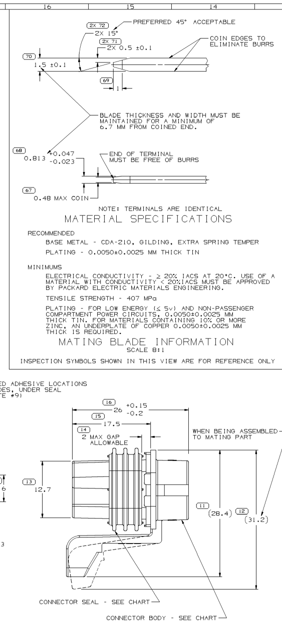

NOTE: TERMINALS ARE IDENTICAL

MATERIAL SPECIFICATIONS

RECOMMENDED

BASE METAL - CDA-210, GILDING, EXTRA SPRING TEMPER

PLATING - 0.0050±0.0025 MM THICK TIN

MINIMUMS

ELECTRICAL CONDUCTIVITY - ≥ 20% IACS AT 20°C. USE OF A MATERIAL WITH CONDUCTIVITY < 20%IACS MUST BE APPROVED BY PACKARD ELECTRIC MATERIALS ENGINEERING.

TENSILE STRENGTH - 407 MPa

PLATING - FOR LOW ENERGY (≤ 5v) AND NON-PASSENGER COMPARTMENT POWER CIRCUITS, 0.0050±0.0025 MM THICK TIN. FOR MATERIALS CONTAINING 10% OR MORE ZINC, AN UNDERPLATE OF COPPER 0.0050±0.0025 MM THICK IS REQUIRED.

MATING BLADE INFORMATION

SCALE 8:1

INSPECTION SYMBOLS SHOWN IN THIS VIEW ARE FOR REFERENCE ONLY

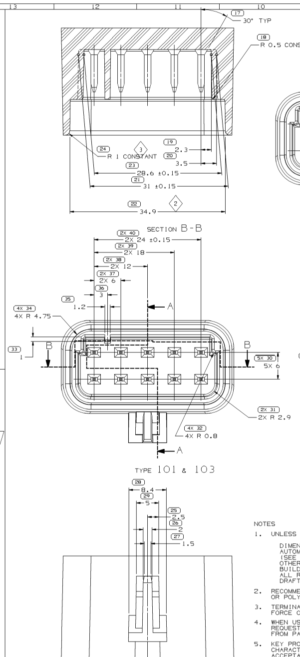

SECTION B-B

TYPE 101 & 103

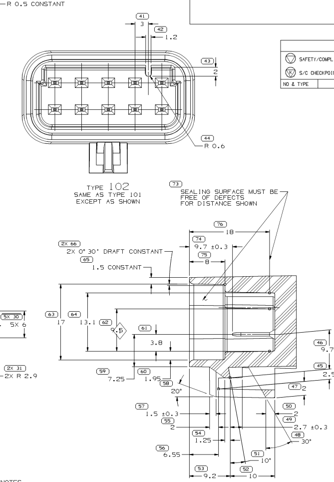

TYPE 102
SAME AS TYPE 101
EXCEPT AS SHOWN

SECTION A-A

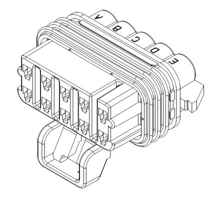

NOTES

1. UNLESS OTHERWISE SPECIFIED AND/OR INDICATED:

   DIMENSIONS ARE TO FACE OF VIEW SHOWN AND AUTOMATICALLY ROUNDED BY COMPUTER FOR INSPECTION (SEE MATH MODEL FOR PRECISE DIMENSIONS). FOR ALL OTHER DIMENSIONS NOT SHOWN BUT REQUIRED FOR TOOL BUILD, SEE MATH MODEL FOR PRECISE TOOL PATH DATA.
   ALL RADII 0.4
   DRAFT IS 1° ON ALL OUTSIDE SURFACES
2. RECOMMENDED MATERIAL: GLASS FILLED NYLON OR POLYESTER
3. TERMINAL MUST WITHSTAND A MINIMUM PUSHOUT FORCE OF 89 N (20 LBS)
4. WHEN USING THIS INFORMATION FOR A NEW DESIGN REQUEST THE LATEST COPY OF THIS PRINT FROM PACKARD ELECTRIC
5. KEY PRODUCT CHARACTERISTIC SYMBOLS (◇,▽) INDICATE PRODUCT CHARACTERISTICS THAT REQUIRE SPECIAL CARE, DOCUMENTATION, AND ACCEPTANCE CRITERIA PER GM 1805 QN AND DELPHI PACKARD ELECTRIC SYSTEMS PROCEDURES.

MATING PART INFORMATION

NOTES

1. UNLESS OTHERWISE SPECIFIED AND/OR INDICATED:

   DIMENSIONS ARE TO FACE OF VIEW SHOWN AND AUTOMATICALLY ROUNDED BY COMPUTER FOR INSPECTION (SEE MATH MODEL FOR PRECISE DIMENSIONS). FOR ALL OTHER DIMENSIONS NOT SHOWN BUT REQUIRED FOR TOOL BUILD, SEE MATH MODEL FOR PRECISE TOOL PATH DATA.
2. CONN & SEAL ASM-TO ACCEPT 2.5 MAX DIA CABLE
3. CAVITIES TO ACCEPT 12048074 TERMINAL OR EQUIVALENT
4. THIS ASSEMBLY TO ACCEPT CABLE SEAL 12048086 OR EQUIVALENT
5. SHIP IN PLASTIC BAGS OR SHIPPING CONTAINERS LINED WITH PLASTIC LINER BAG OR LINER TO BE SEALED TO PREVENT ENTRY OF FOREIGN MATTER
6. THIS PART IS NOT CONTROLLED FOR AUTOMATIC FEEDING
7. CONNECTOR ACCEPTS CPA 12020833
   TPA 12177082
8. SEALING CODE #3
9. FOR PART NUMBERS WITH ADHESIVE, USE M3510001 OR ADHESIVE APPROVED BY MATERIALS ENGINEERING TO GLUE CONNECTOR SEAL TO CONNECTOR
10. MINIMUM RETENTION OF PERIPHERAL SEAL TO CONNECTOR IS 4.1 N
11. CONNECTOR TO ACCEPT CAP/COVER 12129589

PART NO. WITH ADHESIVE	REV	N/P	PART NO. WITHOUT ADHESIVE	REV	N/P	NO. OF CAVITIES	CAVITIES BLOCKED	CONNECTOR BODY PART NO	CONNECTOR BODY COLOR	CONNECTOR SEAL PART NO	MATING CONNECTOR	NOTES	INDEX TYPE	REPLACED BY	
-	-	-	12160397	C3	-	5	F,G,H,J,K	12160396	LT GREEN	12077436	12045808	1-8	101	-	
-	-	-	12124012	E4	-	6	D,E,G,K	12124016	BROWN	12077436	A.B.S. MODULE	1-8	103	-	
-	-	-	12110073	D5	-	7	E,K,G	12110074	CREAM	12077436	12045808	1-8	101	-	
-	-	-	12089888	B	-	10	NONE	12045809	BLK	12077436	12045808	1-10	101	12065425	
-	-	-	12084380	C4	-	8	G,H	12084381	LT GRAY	12077436	12045808, AC MOD	1-8	101	-	
-	-	-	12065462	A	-	7	G,H,J	12052934	BLUE	12047939	AC CRUISE MODULE	1-8	101	-	
-	-	-	12065461	A	-	10	NONE	12052190	MED GRAY	12047939	12052189	1-8	102	-	
-	-	-	12065460	A	-	10	NONE	12045809	BLK	12047939	12045808	1-8	101	-	BODY TYPE II
-	-	-	12065427	D4	-	7	G,H,J	12052934	BLUE	12077436	12045808, AC MOD	1-8	101	-	
-	-	-	12065426	D3	-	10	NONE	12052190	MED GRAY	12077436	12052189	1-8	102	-	
12186688	B2	-	12065425	E3	-	10	NONE	12045809	BLK	12077436	12045808	1-8	101		BODY TYPE I
-	-	-	12059298	A	-	7	G,H,J	12052934	BLUE	12045811	AC CRUISE MODULE	1-8	101	12065427	
-	-	-	12052420	A	-	10	NONE	12052190	MED GRAY	12045811	12052189	1-8	102	12065426	
-	-	-	12045812	A	-	10	NONE	12045809	BLK	12045811	12045808	1-8	101	12065425	

SYMBOL DEFINITION		
A DIMENSION WITHOUT AN INSPECTION REPORT SYMBOL ( ) DOES NOT REQUIRE INSPECTION. IT MAY BE CONTROLLED ON THE INDIVIDUAL COMPONENT DRAWING.	TOTAL NO OF INSPECTIONS REQUIRED	106
	LAST NO. USED	76

MISSING SYMBOLS: NO MISSING SYMBOL NUMBER

KEY PRODUCT CHARACTERISTICS				
SAFETY/COMPLIANCE	FIT/FUNCTION		TOTAL ON DRAWING	3
S/C CHECKPOINTS	F/F CHECKPOINTS		LAST NO. USED	3
NO & TYPE	DESCRIPTION	RATIONALE	PTS	ZONE

DATE	STG	REV	N/P	CHG	ZONE	REVISION HISTORY	AUTH	DR	APVD 1	APVD 2
15SE05	R	01	-	-		CLEARED REV COL AND REDRAWN TO PD; 12110073 - CONN BODY COLOR WAS NATURAL AND REMOVED SNOWCONES NOTE; 12065425-27, 12084380, 12124012, 12160397 & 12186688-UPDATED PDM ATTRIBUTES	272213	GPS	JAA	EST
08NO05	R	02	-	-		ALL ACTIVE PARTS - ADDED NOTE 11	274267	HCG	JVM	BDG
20AP06	R	03	-	-		ALL ACTIVE PARTS - ADDED TPA 12177082 TO NOTE 7 AND REMOVED TPA COLUMN FROM CHART	279083	GPS	AUG	BDG
22SE15	R	04	-	-		12065427, 12084380, 12110073 & 12124012 - OBSOLETE	430641	NRM	JVM	FL

A LINE DRAWN THROUGH A PART NUMBER INDICATES THAT PHYSICAL PARTS ARE NOT AVAILABLE FOR ORDERING.

PART NUMBERS THAT DO NOT HAVE A LINE PRESENT INDICATE THAT PHYSICAL PARTS ARE AVAILABLE FOR ORDERING.

CONTACT DELPHI SALES TO ASSURE AVAILABILITY OF PARTS.

DWG TYPE: PART DRAWING

STYLE

VOLUME (CM³) | DISTR CODE: D

UNLESS OTHERWISE SPECIFIED

THIS DOCUMENT IS IN ACCORDANCE WITH ASME Y14.5M-1994 AS AMENDED BY THE GM GLOBAL DIMENSIONING AND TOLERANCING ADDENDUM-2001. SEPARATE PATTERNS OF FEATURES MAY BE GAGED SEPARATELY REGARDLESS OF DATUM REFERENCES.

ALL DIMENSIONS ARE IN MILLIMETERS

REFERENCE

(N/A) PROCESS SENSITIVE DIMENSION

THIRD ANGLE PROJECTION

DO NOT SCALE

USE MATH DATA

CAD NX

DELPHI

DELPHI PACKARD ELECTRICAL/ELECTRONIC ARCHITECTURE
WARREN, OH

COPYRIGHT 1986 DELPHI CORPORATION AND/OR ITS AFFILIATES.
ALL RIGHTS RESERVED.
REVISED 2015
THIS DRAWING IS THE PROPERTY OF DELPHI CORPORATION AND CONTAINS DELPHI CONFIDENTIAL INFORMATION. THE REPRODUCTION, DISTRIBUTION AND UTILIZATION OF THIS DOCUMENT OR ITS RELATED CAD MATH DATA, AS WELL AS COMMUNICATION OF ANY CONTENT TO OTHERS, WITHOUT EXPRESS AUTHORIZATION, IS PROHIBITED.

		DATE
DR		
APVD1	M. CHAPIN	08AP86
APVD2	J. COLDSNOW	08AP86
APVD3	R. BARTLEY	11AP86
APVD4		
APVD5		

SUBSTANCES OF CONCERN AND RECYCLED CONTENT PER DELPHI 10949001

MATERIAL: SEE DRAWING

DRAWING NAME: TAXI ASM CONN F M/P 150 SLD

DRAWING NUMBER: 12048226

SIZE	SCALE	FRAME NO	SHEET NO	STG	REV	N/P
A1×3	4:1	1 OF 2	1 OF 1	R	04	-

DRAWING NUMBER: 12048226

SIZE	SCALE	FRAME NO	SHEET NO	STG	REV	N/P
A1×3	4:1	2 OF 2	1 OF 1	R	04	-

12048226