SYMBOL DEFINITION			MISSING SYMBOLS
A DIMENSION WITHOUT AN INSPECTION REPORT SYMBOL ⬭ DOES NOT REQUIRE INSPECTION. IT MAY BE CONTROLLED ON THE INDIVIDUAL COMPONENT DRAWING.	TOTAL NO OF INSPECTIONS REQUIRED	31	22-25
	LAST NO. USED	25	

DWG STATUS DATE	STG	REV	N/P	CHG	ZONE	REVISION HISTORY	AUTH	DR	APVD 1	APVD 2
05AP00	R	01	-	-		CLEARED REV COLUMN & "SHT 1 OF 6" WAS "SHT 1 OF 5"	000005	FMO	FKV	CD
11OC00	R	02	-	-		12052466 - REVISED CORE WING ATTRIBUTE FROM SKIVE TO STAMP SERRATION, REVISED MATERIAL SPEC WAS P2604ABW	203713	JMR	JMR	LF
24SE01	R	03	-	-		12064971 - ADDED TO CUSTOMER PART DRAWING	213895	AKJ	AKJ	DS
23MY02	R	04	-	-		REMOVED CUSTOMER STAMP FOR PART NUMBER 12047767	227770	JEB	JEB	DS
12DE01	R	05	-	-		15305306 - REVISED REV LEVEL	218490	RAO	GEG	GMC
17SE03	R	06	-	-		12047767 - UPDATED PDM ATTRIBUTES	245985	ADK	BB	TM
14OC03	R	07	-	-		15317766, 15305306, 12064971, 12047687 - MATERIAL SPEC WAS M3604A59	245588	ADK	TLD	BG
17FE04	-	08	-	-		12047767,12052466,12064971,12160812, 15305306 & 15317766 - T.Q.D. UPDATED	250621	JS	JS	BG
19OC04	R	09	-	-		12064971, 15317766, 15305306, 12160812, 12052466 & 12047767 - ADDED TERMINAL ID NOTE	260108	CTR	JVM	MKM
13JA05	R	10	-	-		12047767 - UPDATED PDM ATTRIBUTES	262266	HAM	NDM	BDG
17MR05	R	11	-	-		ALL ACTIVE PARTS - UPDATED PDM ATTRIBUTES	265692	AKJ	AKJ	BDG
20AP05	R	12	-	-		12047767 - MAT'L SPEC WAS M3604A59	267141	MDH	FRG	BDG
21JL05	R	13	-	-		12047767 & 12064971 - CREATED NISSAN CUSTOMER PART DRAWING	265749	RTV	AUG	TAV
27SE05	R	14	-	-		15317766, 15305306, 12160812, 12064971, 12052466 & 12047767 - ADDED EXCLUDING COIN TO DIM 6	269136	RTV	FRG	MKM
09MR06	R	15	-	-		12047767, 12052466 & 12064971 - UPDATED PDM ATTRIBUTES	276509	JBD	AUG	JES
16JN06	R	16	-	-		ALL ACTIVE PARTS - PSD WAS #6 & DIM #2 WAS 2.45 MAX	281779	JTZ	JVM	BDG
14OC08	R	17	-	-		13737252 - RELEASED	406418	RHG	JHP	RHG
19MR09	R	18	-	-		ALL ACTIVE PARTS - UPDATED MAT'L CALLOUT	407590	LGB	GLG	GEM
24MY12	R	19	-	-		13964351 & 13964643 - RELEASED	418326	AHG	JAA	RP
01JN12	R	20	-	-		ALL AVAILABLE PARTS - ADDED "USED MATERIAL" NOTE	418407	AHG	JAA	RP
13OC15	R	21	-	-		ADDED 12047767 & 12064971 CARRIER STRIP VIEW	430832	LTZ	SBH	HJJ
27NO17	R	22	-	-		ALL ACTIVE PARTS - UPDATED PDM ATTRIBUTES	438425	ASL	JVM	LB
15OC18	R	23	-	-		ALL ACTIVE PARTS - ADDED "UNSEALED" COLUMN ON CHART	441102	CGD	CGD	LES

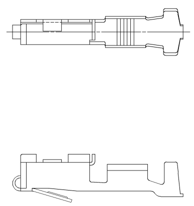

TYPE 102
SAME AS TYPE 101
EXCEPT AS SHOWN

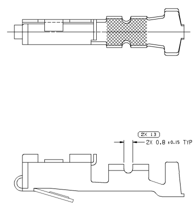

TYPE 103
SAME AS TYPE 101
EXCEPT AS SHOWN

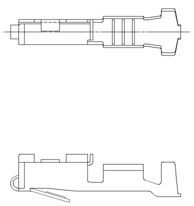

TYPE 104
SAME AS TYPE 101
EXCEPT AS SHOWN

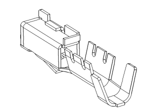

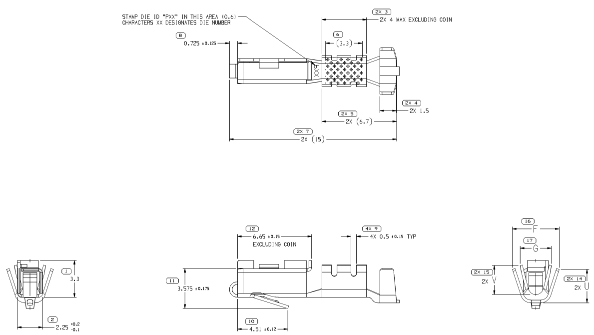

TYPE 101

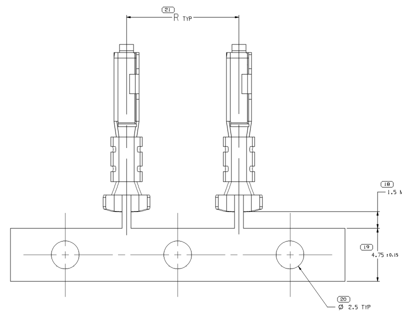

CARRIER STRIP VIEW

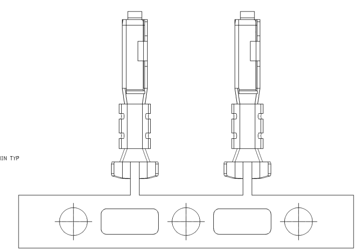

12047767 & 12064971
SAME AS OTHER CARRIER STRIP VIEW
EXCEPT AS SHOWN

NOTES

1. UNLESS OTHERWISE SPECIFIED AND/OR INDICATED:

   DIMENSIONS ARE TO FACE OF VIEW SHOWN AND AUTOMATICALLY ROUNDED BY COMPUTER FOR INSPECTION. (SEE MATH MODEL FOR PRECISE DIMENSION) FOR ALL OTHER DIMENSIONS NOT SHOWN BUT REQUIRED FOR TOOL BUILD, SEE MATH MODEL FOR PRECISE TOOL PATH DATA.

2. TERMINAL ENGAGE 3N TO 10N TERMINAL DISENGAGE 1.5N TO 8N WHEN MATED TO A 0.81 THICK X 1.5 WIDE HARDENED STEEL BLADE.
3. "PXX" INDICATES "P" PLUS LAST TWO DIGITS OF MAKE SERIES NUMBER (P01, P02, P03, ETC).
4. DO NOT PROBE, TEST OR OTHERWISE CONTACT THE INTERIOR REGION (THE SPRING OR ANY MOVING PART) OF THIS TERMINAL. SEVERE DAMAGE CAN OCCUR, COMPROMISING THE PERFORMANCE OF THE ELECTRICAL INTERFACE.
5. MATERIAL USED IS C654 - TIN PLATED SILICON BRONZE

UNPLATED PART NO	UNPLATED REV	UNPLATED N/P	UNPLATED MAT'L SIZE	UNPLATED MAT'L SPEC	PLATED PART NO	PLATED REV	PLATED N/P	RESTRICTED	PLATED MAT'L SPEC	CABLE SIZE (MM²)	CABLE ID	CABLE DIA	TYPE	F ±0.3	G ±0.2	R	(U)	(V)	UNSEALED
			0.25 X 29		13964643	01	AC	RESTRICTED	SEE NOTE #5	1-0.8	17	2.4-1.7	101	4.2	2.8	10.08	3	2.6	X
-	-	-	0.25 X 29	-	13964351	01	AC	RESTRICTED	SEE NOTE #5	0.5-0.35	21	2.2-1.3	101	3.5	2.1	10.08	-	2.1	X
			0.25 X 29		13737252	01	AD	-	METAL COPPER ALLOY TIN PLATED	0.22-0.13	25	1.1-0.81	104	1.9±0.2	1.6±0.1.5	10.08	1.9	1.45	X
			0.25 X 29		15317766	03	AH	-	METAL COPPER ALLOY TIN PLATED	0.5-0.35	21	1.3-1.2	101	2.3	2.1	10.08	-	-	X
			0.25 X 29		15305306	03	AH	-	METAL COPPER ALLOY TIN PLATED	0.35-0.6	22б	-	104	4.2	2.8	10.08	-	-	X
			0.25 X 29		12160812	03	AH	-	METAL COPPER ALLOY SELECTIVE GOLD PLATED	1-0.8-0.5	17	2.4-1.7	101	4.2	2.8	10.08	-	-	X
			0.25 X 29		~~12124730~~	B1	-	-	METAL COPPER ALLOY TIN PLATED	1-0.8	17	2.4-1.7	101	4.2	2.8	10.08	-	-	-
			0.25 X 29		12064971	06	AL	-	METAL COPPER ALLOY TIN PLATED	0.5-0.35	21	2.2-1.3	101	3.5	2.1	10.08	-	2.1	X
			0.25 X 29		12052466	07	AJ	-	METAL COPPER ALLOY TIN PLATED	0.2	24	1.2	104	2.6	1.5 ±0.1	10.08	-	-	X
			0.25 X 30.18		~~12048160~~	F2	-	-	METAL COPPER ALLOY TIN PLATED	1	16	2.64-2.48	103	4.7	3.6	10.08	-	-	-
~~12047883~~	A2	-	0.25 X 29	COPPER ALLOY	12047767	11	AM	-	METAL COPPER ALLOY TIN PLATED	1-0.8	17	2.4-1.7	101	4.2	2.8	10.08	3	2.6	X
			0.25 X 30.18		~~12047687~~	F2	-	-	METAL COPPER ALLOY TIN PLATED	0.35	22	2-1.84	101	3.4	2.2	10.08	-	-	-

DRAWING NUMBER 12047884

SIZE	SCALE	FRAME NO	SHEET NO	STG	REV	N/P
A1x3	10:1	2 OF 2	1 OF 7	R	23	-

DWG TYPE: PART DRAWING

UNLESS OTHERWISE SPECIFIED

ALL DIMENSIONS ARE IN MILLIMETERS

THIRD ANGLE PROJECTION

DO NOT SCALE

USE MATH DATA

•APTIV•

CONNECTION SYSTEMS
WARREN, OH

COPYRIGHT 1996 APTIV. ALL RIGHTS RESERVED.

THIS DRAWING IS THE PROPERTY OF APTIV AND CONTAINS APTIV CONFIDENTIAL INFORMATION. THE REPRODUCTION, DISTRIBUTION AND UTILIZATION OF THIS DOCUMENT OR ITS RELATED CAD MATH DATA, AS WELL AS COMMUNICATION OF ANY CONTENT TO OTHERS, WITHOUT EXPRESS AUTHORIZATION, IS PROHIBITED.

		DATE
DR		
APVD1	S. LIMON A.	26AU96
APVD2	FRANCISCO KOPCA	26AU96
APVD3	T. DUTTLE	22OC96
APVD4		
APVD5		

SUBSTANCES OF CONCERN AND RECYCLED CONTENT PER APTIV 10949001

MATERIAL: SEE CHART

DRAWING NAME: TAXI TERM F M/P 150 LOCKING LANCE

DRAWING NUMBER: 12047884

SIZE	SCALE	FRAME NO	SHEET NO	STG	REV	N/P
A1x3	10:1	1 OF 2	1 OF 7	R	23	-

15047884