SYMBOL DEFINITION		
A DIMENSION WITHOUT AN INSPECTION REPORT SYMBOL (□) DOES NOT REQUIRE INSPECTION. IT MAY BE CONTROLLED ON THE INDIVIDUAL COMPONENT DRAWING.	TOTAL NO OF INSPECTIONS REQUIRED	23
	LAST NO. USED	17

MISSING SYMBOLS
NO MISSING SYMBOL NUMBER

DWG STATUS DATE	STG	REV	N/P	CHG	ZONE	REVISION HISTORY	AUTH	DR	AP/D1	AP/D2
08JL02	R	02	-	-		CLEARED REV COLUMN:12010717 - MAT'L SPEC WAS R0067547 PA6-BLK; 12015092 - MAT'L SPEC WAS R0066930 PA6-RED; 12015460 - MAT'L SPEC WAS R0065644 PA6-BLU	226196	JGR	EDV	RC
16JL07	R	03	-	-		ADDED NOTE 8: UPDATED MATERIAL DESCRIPTION	401863	PJC	PJC	SS
29OC09	R	04	-	-		ALL ACTIVE PARTS - DIM 13 +0.3/-0.15 WAS 13 +/- 0.15	409347	APR	APR	APR
17JN10	R	05	-	-		13B31309 - RELEASED	411088	JEG	JAA	FOG
14JL10	R	06	-	-		13B31309 - ADDED DIMS (2 PLCS)	411329	ESC	ESC	FOG
21OC10	R	07	-	-		ALL ACTIVE PARTS - DIM 19 +0.15/-0.2 WAS DIM 19 ±0.15	412331	LHT	LHT	RBC

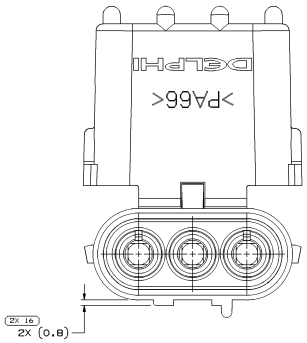

TYPE 103
SAME AS TYPE 101
EXCEPT AS SHOWN
NO OPTIONAL CONSTRUCTION ALLOWED

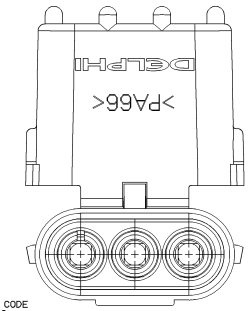

INDEX CODE
-100-
(ALSO SEE HAND BOOK)

TYPE 102
SAME AS TYPE 101
EXCEPT AS SHOWN

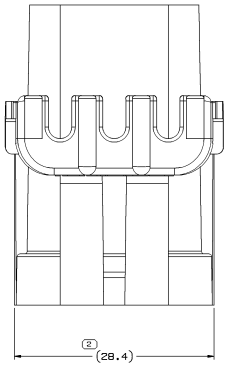

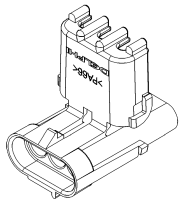

SCALE 2:1

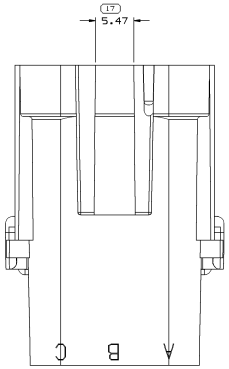

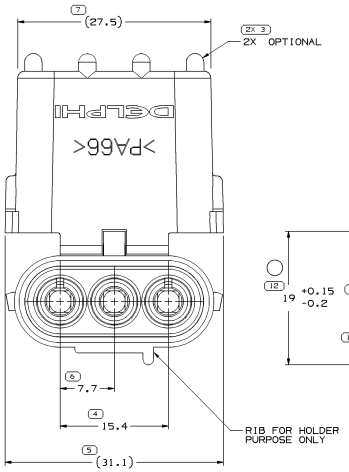

INDEX CODE
-101-
(ALSO SEE HAND BOOK)

TYPE 101

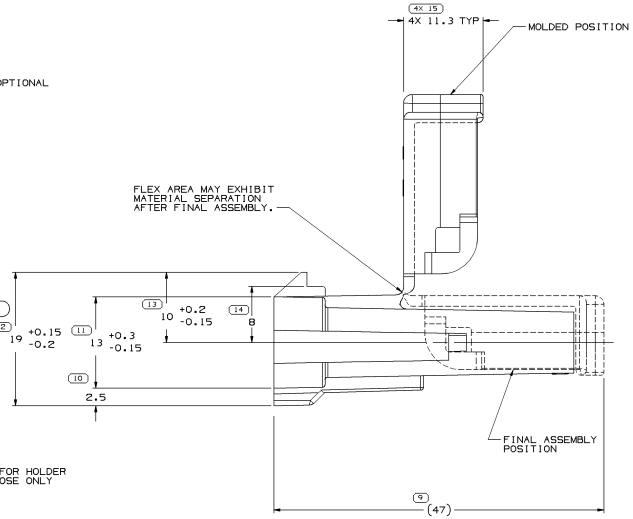

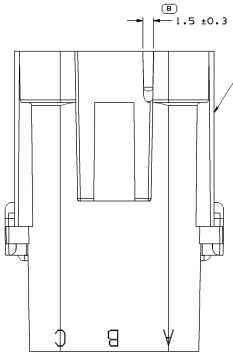

PULL OUT RIBS PERMITTED ALONG
THIS AND OPPSITE SURFACE.

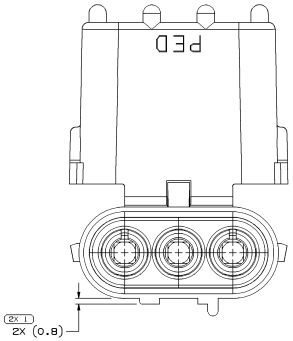

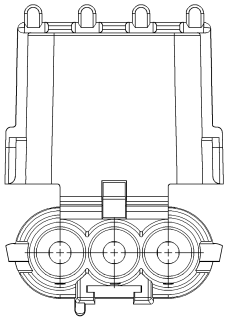

OPTIONAL CONSTRUCTIONS
TYPES 101 & 102

NOTES

1. UNLESS OTHERWISE SPECIFIED AND/OR INDICATED:
   DIMENSIONS ARE TO FACE OF VIEW SHOWN AND AUTOMATICALLY ROUNDED BY COMPUTER FOR INSPECTION (SEE MATH MODEL FOR PRECISE DIMENSIONS). FOR ALL OTHER DIMENSIONS NOT SHOWN BUT REQUIRED FOR TOOL BUILD, SEE MATH MODEL FOR PRECISE TOOL PATH DATA.

2. THIS PRODUCT IS NOT CATEGORIZED AS AN APPEARANCE ITEM, MINOR IMPERFECTIONS INCLUDING, BUT NOT LIMITED TO, FLOW MARKS, COLOR BLEMISHES, GATE VESTIGE, AND SOFT FLASH THAT DO NOT AFFECT THE FIT, FORM, OR FUNCTION OF THE PART ARE PERMISSIBLE PER DPNP-4.7-CS-01.

3. FOR APPLICATION DATA SEE THE INDIVIDUAL APPLICATION DRAWINGS.

4. CAUTION: DO NOT ATTEMPT TO COPY THIS DRAWING WHEN DESIGNING A MATING PART TO A WEATHER PACK CONNECTOR. PLEASE REQUIEST THE LATEST COPY OF DRAWING NUMBER 12020084 FROM THE PACKARD ELECTRIC DIVISION

5. MATERIAL RECYCLING CODE PER ISO 11469. (2.3)X(0.1) CHARACTERS AS SHOWN TO BE LOCATED ON ANY EXTERIOR SURFACE. OPTIONAL CONSTRUCTION TO BE NO MATERIAL RECYCLING CODE.

6. (2.3)X(0.1) RAISED DELPHI CORPORATE BRAND TO BE LOCATED ON ANY EXTERIOR SURFACE, PREFERABLY VISIBLE AT FINAL ASSEMBLY. OPTIONAL CONSTRUCTION TO BE "PED" OR NO LOGO.

7. TO VERIFY CONNECTOR PHYSICAL ATTRIBUTES OR APPEARANCE ITEMS, REFER TO VPS-226.

PART NO	REV	N/P	STATUS	MATERIAL SPECIFICATION AND COLOR	TYPE	VOLUME CM³
13B31309	01	AB		POLYAMIDE COMPOUND - BLK	103	7.895
12015460	07	AC		POLYAMIDE COMPOUND - BLU	101	7.923
12015092	07	AC		POLYAMIDE COMPOUND - RED	102	7.894
12010717	07	AC		POLYAMIDE COMPOUND - BLK	101	7.923

(12) PROCESS SENSITIVE DIMENSION

DIMENSIONS ENCLOSED IN ( ) INDICATE REFERENCE DIMENSIONS AND NO TOLERANCE LIMITS ARE ESTABLISHED

REFERENCE

| DIMENSIONAL RANGE (MM) | | |